Digitized Automation for a Changing World

Standard Compact Drive MS300 Series

www.deltaww.com

DELTA

Smarter. Greener. Together.

Compact and Intelligent

The new standard for micro drives

The automation industry today continues to face challenges such as increasing competition and rising costs. In addition to improving productivity and reducing labor, the driving force for automation is the shift to higher efficiency, optimal quality, and most importantly, flexibility and compatibility for a wide range of applications.

Delta's MS300 series are the new generation high performance and standard compact vector control drives that inherit Delta's superior drive technology—all in a compact drive that has been reduced 40% in size.

A variety of essential functions are built-in as standard, including: PLC capacity for simple programming needs, a communication slots for various communication cards, and a USB port to make data uploads and downloads fast and easy. This saves the need for additional hardware, while providing more installation space for the power cabinet. Other key features include: Support for both IM and PM motor control for application flexibility, an STO function to ensure worry-free operation while protecting facilities from damage, and a simplified wiring process with a new screwless wiring design of terminal blocks for quick installation.

Saving space, reducing setup and wiring time, and providing high efficiency and a highly stable system, the MS300 are your key to improving market competitiveness and ensuring success.

Models Overview

Standard Models
High Speed Models
Exterior Design and Interfaces
Optional Cards

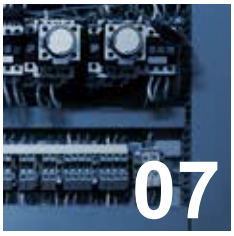

Optimized Space Utilization

Compact Design
Side-by-Side Installation

Outstanding Drive Performance

Supports IM and PM Motors
High Starting Torque
Deceleration Energy Backup (DEB)
Enhanced Braking Capability

Strong System Support

Multi-motor Control
Pulse Control
Built-in PLC
High Speed Applications
24 V_{DC} External Power
High Overload Capability
Built-in Brake Chopper
Versatile Communications

Stable, Safe and Reliable

Safety Standards
Enhanced Conformal Coating
IP40 Models
Built-in EMC Filter

Easy to Install

Application Groups
Built-in USB Port
Screwless Wiring of Control Terminal

Wide Range of Applications

Machine Tools
Woodworking Machines
Automatic Tool Changers (ATC)
Pumps
Packaging Machines
Textile Machines

Specifications

Product Specifications
Wiring
Dimensions
Accessories
Model Name Explanation
Ordering Information

Models Overview

Standard Models (IP20 / IP40)

115V single-phase

Applicable Motor Output (kW)	0.2	0.4	0.75
Applicable Motor Output (HP)	0.25	0.5	1
Frame Size	A		C

230V single-phase

Applicable Motor Output (kW)	0.2	0.4	0.75	1.5	2.2
Applicable Motor Output (HP)	0.25	0.5	1	2	3
Frame Size	A		B	C	

230V single-phase (Built-in EMC filter)

Applicable Motor Output (kW)	0.2	0.4	0.75	1.5	2.2
Applicable Motor Output (HP)	0.25	0.5	1	2	3
Frame Size	B			C	

230V 3-phase

Applicable Motor Output (kW)	0.2	0.4	0.75	1.5	2.2	3.7 / 4	5.5	7.5	11	15
Applicable Motor Output (HP)	0.25	0.5	1	2	3	5	7.5	10	15	20
Frame Size	A			B	C		D	E		F

460V 3-phase

Applicable Motor Output (kW)	0.4	0.75	1.5	2.2	3.7 / 4	5.5	7.5	11	15	18.5	22
Applicable Motor Output (HP)	0.5	1	2	3	5	7.5	10	15	20	25	30
Frame Size	A		B	C		D		E		F	

460V 3-phase (Built-in EMC filter)

Applicable Motor Output (kW)	0.4	0.75	1.5	2.2	3.7 / 4	5.5	7.5	11	15	18.5	22
Applicable Motor Output (HP)	0.5	1	2	3	5	7.5	10	15	20	25	30
Frame Size	B			C		D		E		F	

575V 3-phase

Applicable Motor Output (kW)	0.75	1.5	2.2	3.7	5.5	7.5
Applicable Motor Output (HP)	1	2	3	5	7.5	10
Frame Size	A	B	C	C	D	D

Standard Models (IP66)

230V single-phase

Applicable Motor Output (kW)	0.4	0.75	1.5	2.2
Applicable Motor Output (HP)	0.5	1	2	3
Frame Size	A			B

Standard Models (IP66)

230V single-phase (Built-in EMC filter)

Applicable Motor Output (kW)	0.4	0.75	1.5	2.2
Applicable Motor Output (HP)	0.5	1	2	3
Frame Size	A		B	

230V 3-phase

Applicable Motor Output (kW)	0.4	0.75	1.5	2.2	3.7/4	5.5
Applicable Motor Output (HP)	0.5	1	2	3	5	7.5
Frame Size	A			B		C

460V 3-phase

Applicable Motor Output (kW)	0.4	0.75	1.5	2.2	3.7/4	5.5	7.5
Applicable Motor Output (HP)	0.5	1	2	3	5	7.5	10
Frame Size	A				B	C	

460V 3-phase (Built-in EMC filter)

Applicable Motor Output (kW)	0.4	0.75	1.5	2.2	3.7/4	5.5	7.5
Applicable Motor Output (HP)	0.5	1	2	3	5	7.5	10
Frame Size	A			B		C	

High-speed Models (IP20/IP40)

230V single-phase

Applicable Motor Output (kW)	1.5	2.2
Applicable Motor Output (HP)	2	3
Frame Size	C	

230V single-phase (Built-in EMC filter)

Applicable Motor Output (kW)	1.5	2.2
Applicable Motor Output (HP)	2	3
Frame Size	C	

230V 3-phase

Applicable Motor Output (kW)	1.5	2.2	3.7/4	5.5	7.5	11	15
Applicable Motor Output (HP)	2	3	5	7.5	10	15	20
Frame Size	B	C		D	E		F

460V 3-phase

Applicable Motor Output (kW)	1.5	2.2	3.7/4	5.5	7.5	11	15	18.5	22
Applicable Motor Output (HP)	2	3	5	7.5	10	15	20	25	30
Frame Size	B	C		D		E		F	

460V 3-phase (Built-in EMC filter)

Applicable Motor Output (kW)	1.5	2.2	3.7/4	5.5	7.5	11	15	18.5	22
Applicable Motor Output (HP)	2	3	5	7.5	10	15	20	25	30
Frame Size	B	C		D		E		F	

Hardware Design

Compact design and user-friendly interface

Removable Keypad

Press to remove; supports remote operation away from drive

5 digits 7 segments LED display, frequency knob, Up and Left/Down function keys

Removable RFI Jumper

Applicable for different application needs

Built-in USB Port

Easy and fast programming setting, update and real-time monitoring and tuning

Screwless Top Cover Design

Press on both side tabs to remove the cover

Removable Fan

Easy to replace and maintain for a longer lifetime

Option Cards

A wide selection of option cards for highly flexible applications

External Power Supply Card (DC 24V)

EMM-BPS02

Built-in 1 Option Slot

Optimized Space Utilization

Compact Design

Provides more powerful features in smaller sizes with reduction up to 40% that effectively optimizes the installation space

Side-by-Side Installation

Supports side-by-side installation with operating temperatures of -20˚C ~ 40˚C; enables highly flexible and highly efficient installation

Substantial savings in space!

Outstanding Drive Performance

Supports IM and PM Motors

Supports 4 independent induction motor control parameter sets

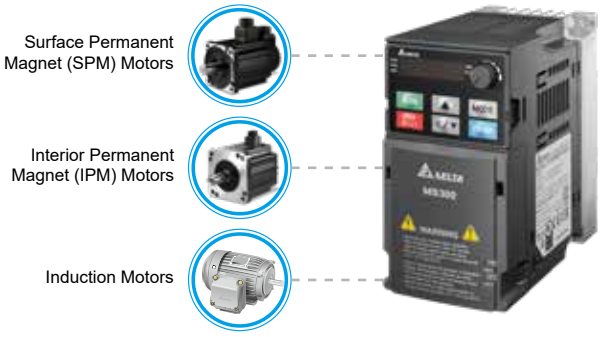

High Starting Torque

Delivers 200% high starting torque with a low speed control of 0.5 Hz and provides outstanding machine stability; suitable for dynamic loading applications

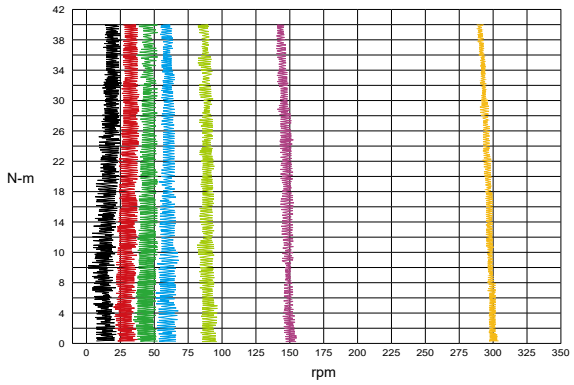

Deceleration Energy Backup (DEB)

Controls the motor deceleration to a stop when an unexpected power shut-down occurs to prevent mechanical damage. When power resumes, the motor will accelerate to its previous speed

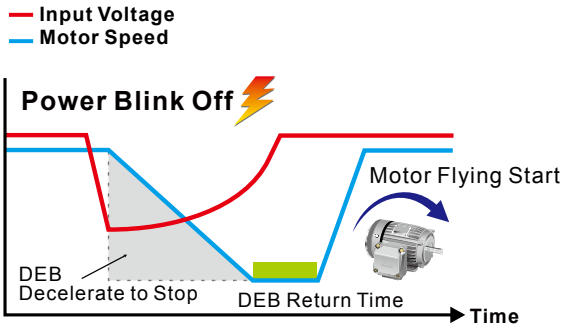

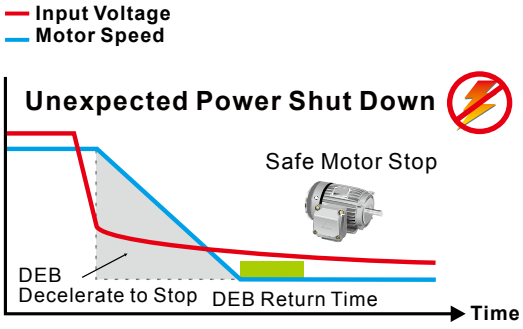

Enhanced Braking Capability

Provides Deceleration Energy Control Mode to shorten braking time by adjusting the motor speed and current, replacing break resistors

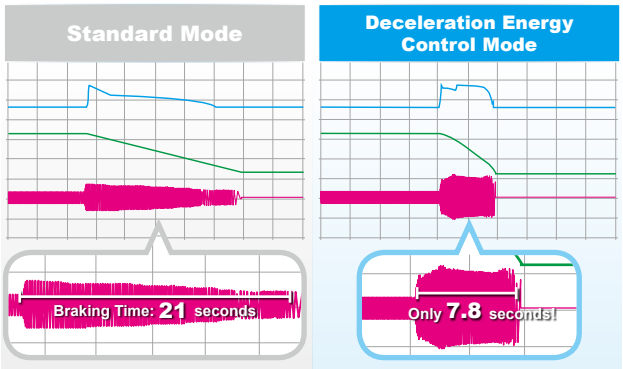

* Actual deceleration performance varies upon different system loads

Strong System Support

Multi-motor Control

Supports 4 induction motors switching control

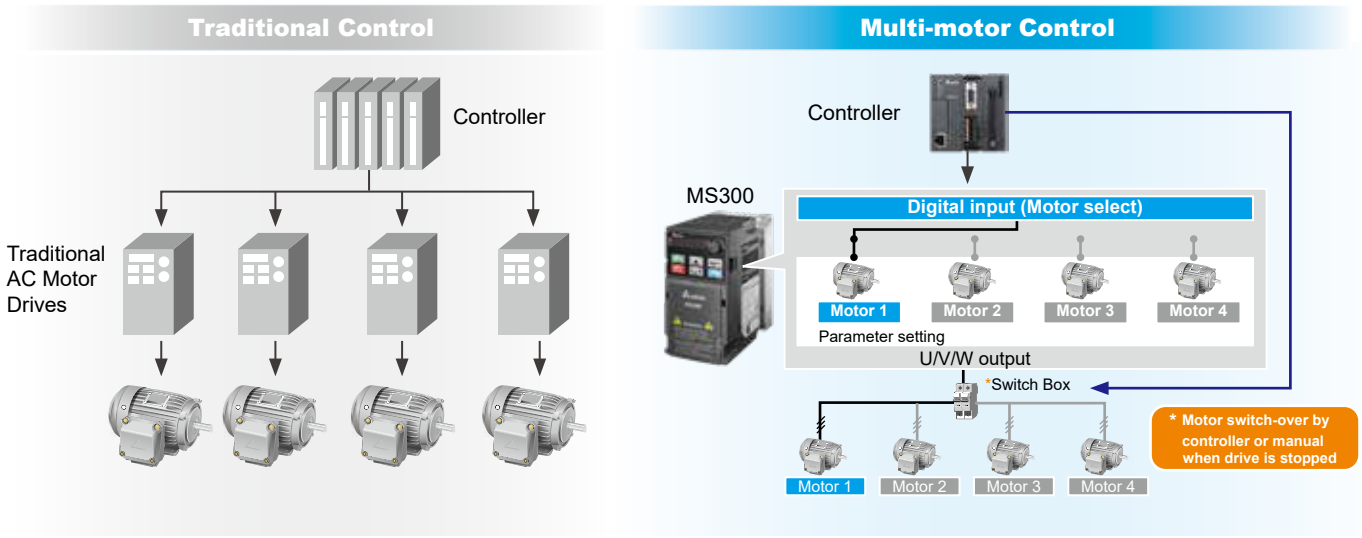

Pulse Input

Supports single pulse input signal from controller as frequency command

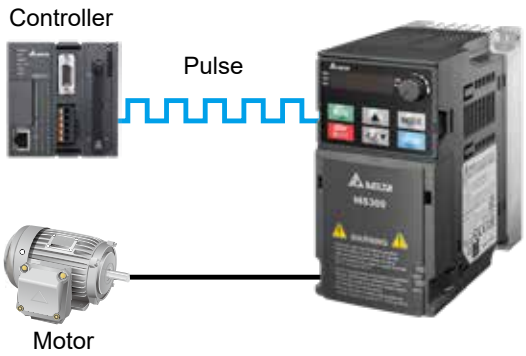

Built-in PLC

Built-in PLC capacity (2k steps) to provide distributed control and independent operation via network connection

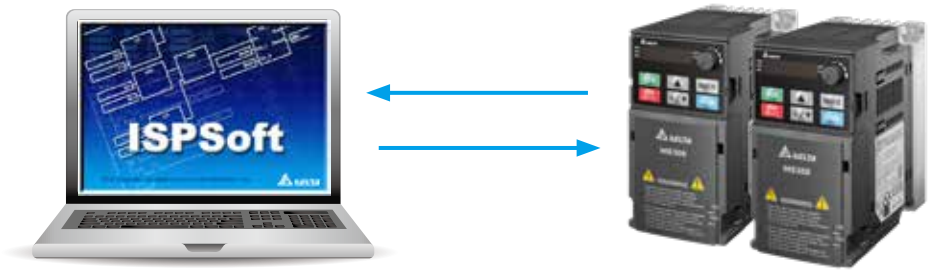

High-Speed Applications

High-speed models are available to support high-speed processing

Type	Model	Frequency Setting
Standard	VFD□□□MS□□□□SAA	0 ~ 599 Hz
High-speed	VFD□□□MS□□□□SHA	0 ~ 1500 Hz

DC 24V External Power

External power supply card is available for external power connection to protect the system and ensure uninterrupted communication when mains power failure occurs

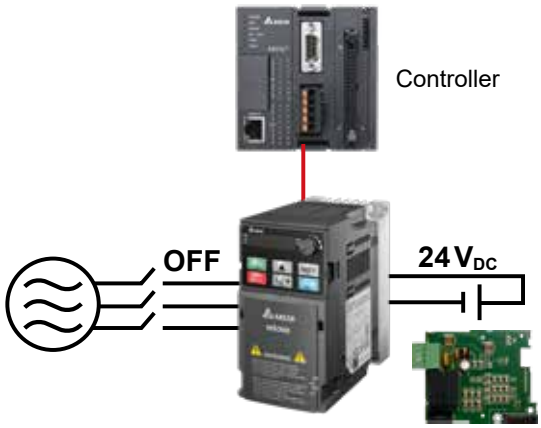

High Overload Capability

- Normal duty: rated current 120% for 60 seconds; 150% for 3 seconds
- Heavy duty: rated current 150% for 60 seconds; 200% for 3 seconds

Built-in Braking Chopper

Larger braking torque capability is provided by using an additional braking resistor

Versatile Communication Interfaces

Built-in RS-485 (Modbus) and various communication card options

Communication	MS300
Modbus	Built-in
PROFIBUS DP	Optional
DeviceNet	Optional
Modbus TCP	Optional
EtherNet/IP	Optional
CANopen	Optional
EtherCAT	Optional

Stable, Safe and Reliable

Safety Standard

Integrated Safe Torque Off (STO), compliance with:

- ISO 13849-1:2015 Category 3 PL d
- EN 61508 SIL2
- EN 60204-1 Category 0
- EN 62061 SIL CL 2

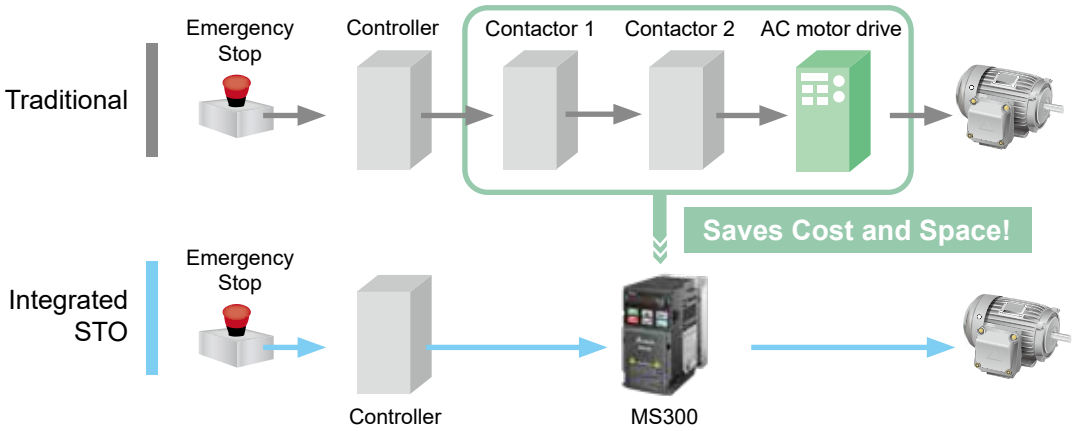

PCB Coating

100% PCB coating (IEC 60721-3-3 class 3C2 standard) ensures drive operation stability and safety in critical environments

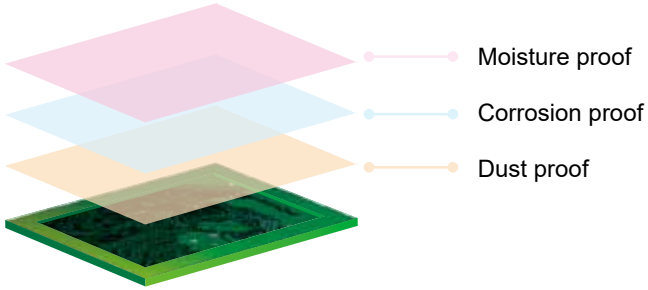

IP40 Models

Strengthened fan coating and concealed air vent prevent dust and other particles from entering the drive, suitable for critical environment applications

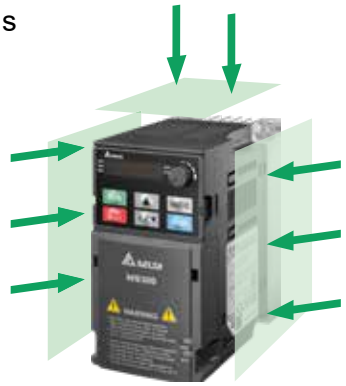

Built-in EMC Filter

Built-in Class A (C2) standard EMC filter; saves on additional procurement cost and wiring time, and provides more cabinet space for other devices to use

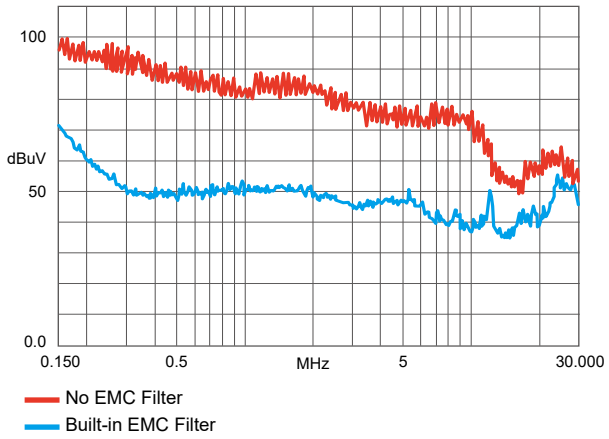

IP66 Models

IIP66/NEMA4X water-proof and dust-proof design enables stable operation under harsh environment. Quick installation without control cabinet saves cost

Easy to Install

Application Groups (Macro)

Simplifies the parameter setting process by grouping the parameters for different applications to use

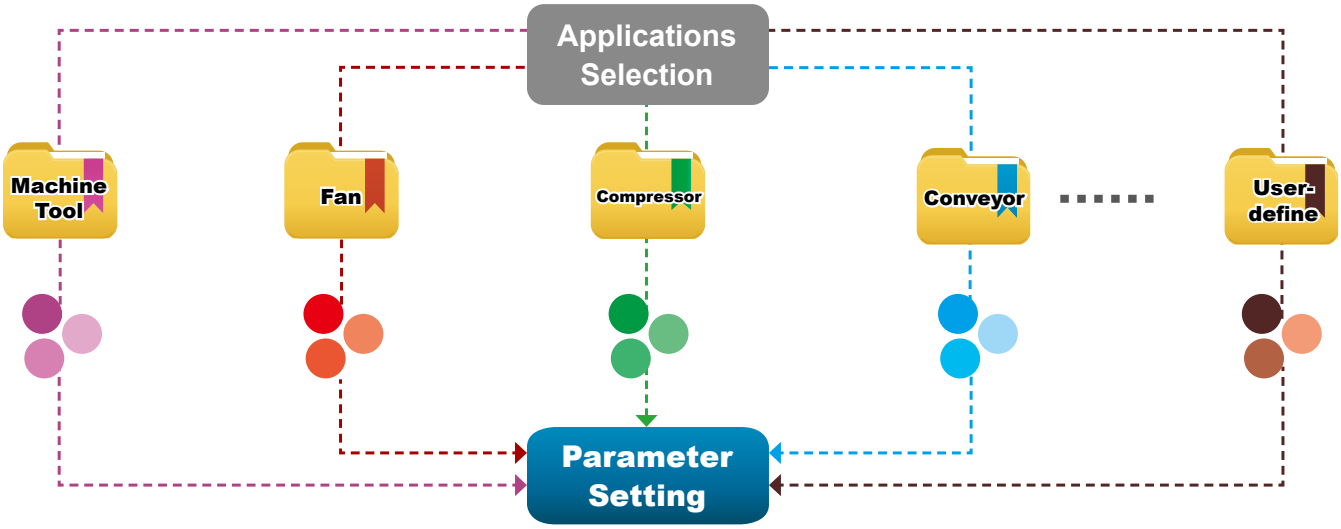

Built-in USB Port

Built-in USB port facilitates the drive setting, updating, real-time monitoring and system tuning process

- No need of USB or RS-485 connectors
- Supports offline (drive power off) parameter setting/copying and system update

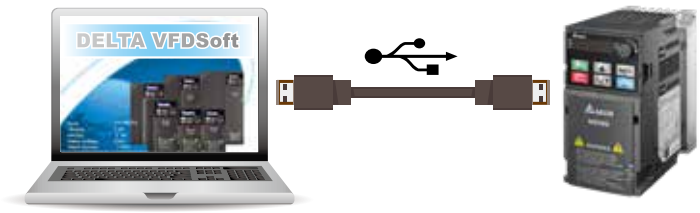

Screwless Wiring of Control Terminal

Spring clamp terminal blocks provide fast and easy wiring

No special tools needed, time-saving

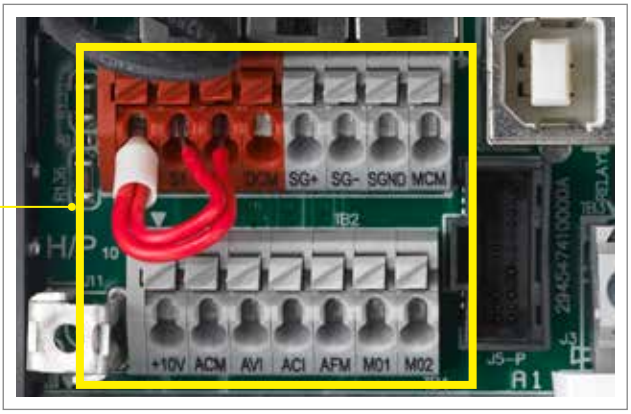

Wide Range of Applications

Machine Tools

Features and Benefits

- High-speed models support main spindle 1500Hz frequency output; suitable for complex and high precision processing applications
- Timely acceleration/deceleration control to improve machinery operation efficiency
- Built-in brake chopper to save on purchasing cost
- Built-in PLC capacity for flexible application needs
- Built-in STO function ensures operator safety and effectively reduces accident risk
- Provides deceleration-to-stop function to protect tools from damage and ensure operator safety

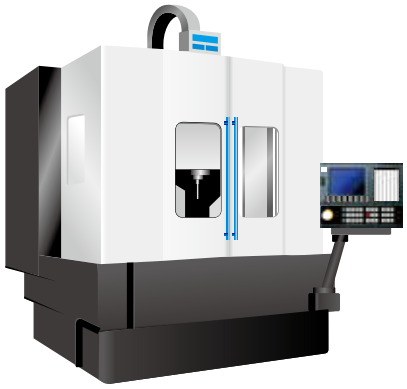

Woodworking Machines

Features and Benefits

- Timely acceleration/deceleration control improves machinery operation efficiency
- Built-in STO function ensures operator safety and effectively reduces accident risk
- Built-in PLC capacity saves on purchasing cost
- Built-in EMC filter effectively reduces electromagnetic interference
- Compact in size and weight, easy to install and maintain

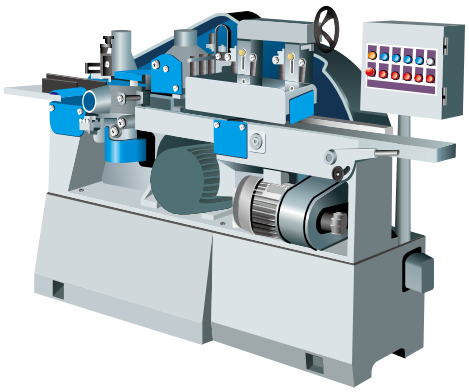

Automatic Tool Changers (ATC)

Features and Benefits

- Compact design of drive provides more cabinet space for other devices to use
- Quick start and timely acceleration/deceleration control function effectively shortens tool changing time and improves system efficiency and productivity
- Simple structure is easy to install and maintain
- Built-in STO function ensures operator safety and effectively reduces accident risk
- Built-in brake choppe saves on purchasing cost

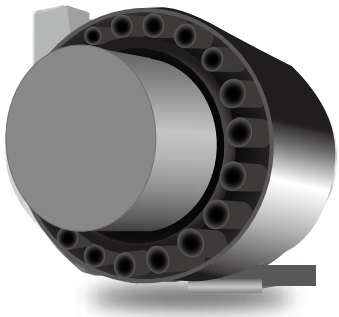

Pump Applications

Features and Benefits

- Built-in PID feedback control
- Built-in PLC capacity saves on purchasing cost of PLC and simpler wiring
- Supports a wide range of input voltages, suitable for various types of pumps application and use in different countries
- Deceleration energy control mode shortens deceleration time and reduces cost and installation space for braking resister

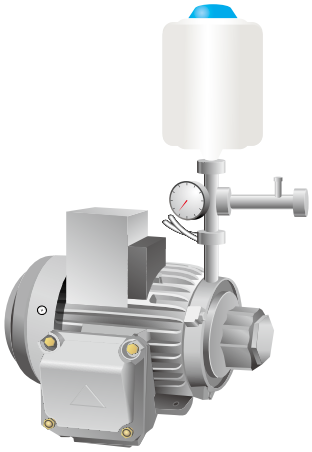

Packaging Machines

Features and Benefits

- Compact design to save installation space
- Built-in STO function ensures operator safety and effectively reduces accident rate
- Built-in brake chopper saves on system construction cost
- Built-in RS-485 (Modbus) and various communication cards upon selection (optional)
- High-speed pulse input
- Supports frequency command by pulse input to improve control precision

Textile Machines

Features and Benefits

- IP40 models provide excellent protection from a high dust, fiber or moisture environment
- Improved heatsink design prevents fiber clogging the air way; modular design of fan is easy to clean and provides longer lifetime
- Improved braking capability shortens the deceleration-to-stop time and is suitable for sudden stop requirements
- Built-in STO function ensures operator safety and effectively reduces accident rate
- Supports both induction motors and PM motors
- Provides deceleration-to-stop function to protect the equipment from damage when sudden power failure occurs

Specifications

IP20/IP40 Models

Single-phase 115 V (Models w/o Built-in EMC Fielter)					
Frame			A		C
Applicable Motor Output (kW)			0.2	0.4	0.75
Applicable Motor Output (HP)			1/4	1/2	1
Inverter Output	Heavy Duty	Rated Output Current (A)	1.6	2.5	4.8
	Normal Duty	Rated Output Current (A)	1.8	2.7	5.5
Input	Rated Voltage / Frequency		1-phase AC 100 V ~120 V (-15% ~ +10%), 50 / 60 Hz		
	Mains Input Voltage Range		85 ~ 132 V		
	Mains Frequency Range		47 ~ 63 Hz		
Carrier Frequency (kHz)			2~15 (default 4)		
Brake Chopper			Built-in		
DC Reactor			Optional		
AC Reactor			Optional		
Cooling Method			Natural air cooling		Fan cooling
Size: W x H (mm)			68 × 128		87 × 157
Size: D (mm)			96	125	152

Single-phase 230 V (Models with Built-in EMC Filter)							
Frame			B			C	
Applicable Motor Output (kW)			0.2	0.4	0.75	1.5	2.2
Applicable Motor Output (HP)			1/4	1/2	1	2	3
Inverter Output	Heavy Duty	Rated Output Current (A)	1.6	2.8	4.8	7.5	11
	Normal Duty	Rated Output Current (A)	1.8	3.2	5	8.5	12.5
Input	Rated Voltage / Frequency		1-phase AC 200 V ~240 V (-15% ~ +10%), 50 / 60 Hz				
	Mains Input Voltage Range		170 ~ 265 V				
	Mains Frequency Range		47 ~ 63 Hz				
Carrier Frequency (kHz)			2~15 (default 4)				
Brake Chopper			Built-in				
DC Reactor			Optional				
AC Reactor			Optional				
Cooling Method			Natural air cooling	Fan cooling			
Size: W x H (mm)			72 × 142			87 × 157	
Size: D (mm)			159			179	

Single-phase 230 V (Models w/o an EMC Filter)				
Frame	A		B	C
Cooling Method	Natural air cooling			Fan cooling
Size: W x H (mm)	68 × 128	68 × 128	72 × 142	87 × 157
Size: D (mm)	96	125	143	152

3-phase 230 V (Models w/o Built-in EMC Filter)

Frame			A			B	C		D	E		F
Applicable Motor Output (kW)			0.2	0.4	0.75	1.5	2.2	3.7/4	5.5	7.5	11	15
Applicable Motor Output (HP)			1/4	1/2	1	2	3	5	7.5	10	15	20
Inverter Output	Heavy Duty	Rated Output Current (A)	1.6	2.8	4.8	7.5	11	17	25	33	49	65
	Normal Duty	Rated Output Current (A)	1.8	3.2	5	8	12.5	19.5	27	36	51	69
Input	Rated Voltage/Frequency		3-phase AC 200 V~240 V (-15%~+10%), 50/60 Hz									
	Mains Input Voltage Range		170~265 V									
	Mains Frequency Range		47~63 Hz									
Carrier Frequency (kHz)			2~15 (default 4)									
Brake Chopper			Built-in									
DC Reactor			Optional									
AC Reactor			Optional									
Cooling Method			Natural air cooling			Fan cooling						
Size: W x H (mm)			68×128			72×142	87×157		109×207	130×250		175×300
Size: D (mm)			96	110	143	143	152		154	185		192

3-phase 460 V (Models with Built-in EMC Filter)

Frame			B			C		D		E		F	
Applicable Motor Output (kW)			0.4	0.75	1.5	2.2	3.7/4	5.5	7.5	11	15	18.5	22
Applicable Motor Output (HP)			1/2	1	2	3	5	7.5	10	15	20	25	30
Inverter Output	Heavy Duty	Rated Output Current (A)	1.5	2.7	4.2	5.5	9	13	17	25	32	38	45
	Normal Duty	Rated Output Current (A)	1.8	3	4.6	6.5	10.5	15.7	20.5	28	36	41.5	49
Input	Rated Voltage/Frequency		3-phase AC 380 V~480 V (-15%~+10%), 50/60 Hz										
	Mains Input Voltage Range		323~528 V										
	Mains Frequency Range		47~63 Hz										
Carrier Frequency (kHz)			2~15 (default 4)										
Brake Chopper			Built-in										
DC Reactor			Optional										
AC Reactor			Optional										
Cooling Method			Fan cooling										
Size: W x H (mm)			72 × 142			87×157		109×207		130×250		175×300	
Size: D (mm)			159			179		187		219		244	

3-phase 460 V (Models w/o an EMC Filter)

Frame	A		B	C	D	E	F
Cooling Method	Natural air cooling		Fan cooling				
Size: W x H (mm)	68×128		72×142	87×157	109×207	130×250	175×300
Size: D (mm)	129	143	143	152	154	185	192

3-phase 575 V (Models w/o an EMC Filter)

Frame			A	B	C		D	
Applicable Motor Output (kW)			0.75	1.5	2.2	3.7	5.5	7.5
Applicable Motor Output (HP)			1	2	3	5	7.5	10
Inverter Output	Heavy Duty	Rated Output Current (A)	1.7	3	4.2	6.6	9.9	12.2
	Normal Duty	Rated Output Current (A)	2.1	3.6	5	8	11.5	15
Input	Rated Voltage/Frequency		3-phase AC 500 V~600 V (-15%~+10 %), 50/60 Hz					
	Mains Input Voltage Range		425~660					
	Mains Frequency Range		47~63					
Carrier Frequency (kHz)			2~15 (default 4)					
Brake Chopper			Built-in					
DC Reactor			Optional					
AC Reactor			Optional					
Cooling Method			Natural air cooling	Fan cooling				
Size: W x H (mm)			68×128	72×142	87×157		109×207	
Size: D (mm)			143	143	152		154	

IP66/NEMA 4X Models

Single-phase 230 V										
Frame			A					B		
VFD_ _ _ _ _ _ _SAA			2A8MS21_ _		4A8MS21_ _		7A5MS21MN	7A5MS21MF	11AMS21_ _	
			M N	M F	M N	M F			M N	M F
Applicable Motor Output (kW)			0.4		0.75		1.5	1.5	2.2	
Applicable Motor Output (HP)			0.5		1		2	2	3	
Inverter Output	Heavy Duty	Rated Output Current (A)	1.1		1.8		2.9	2.9	4.2	
		Rated Output Current (A)	2.8		4.8		7.5	7.2	11	
		Carrier Frequency (kHz)	2~15 (default 4)							
	Normal Duty	Rated Output Current (A)	1.2		1.9		3.2	3.2	4.8	
		Rated Output Current (A)	3.2		5		8.5	8.5	12.5	
		Carrier Frequency (kHz)	2~15 (default 4)							
Input	Heavy Duty	Rated Output Current (A)	7.3		10.8		16.5	16.5	24.2	
	Normal Duty	Rated Output Current (A)	8.3		11.3		18.5	18.5	27.5	
	Rated Voltage/Frequency		1-phase AC 200 V~240 V, 50/60 Hz							
	Operating Voltage (V_{AC})		170~264 (-15%~+10%)							
	Mains Frequency Range (Hz)		47~63							
Net Weight (kg)			2.25	2.65	2.6	2.9	3.1	3.95	3.5	4.0
Cooling Method			Natural air cooling					Fan cooling		
EMC Filter			Optional	Built-in	Optional	Built-in	Optional	Built-in	Optional	Built-in
Protection Rating			IP66 / NEMA 4X							

3-phase 230 V								
Frame			A			B		C
VFD_ _ _ _ _ _ _SAA			2A8MS23MN	4A8MS23MN	7A5MS23MN	11AMS23MN	17AMS23NB	25AMS23MN
Applicable Motor Output (kW)			0.4	0.75	1.5	2.2	3.7	5.5
Applicable Motor Output (HP)			0.5	1	2	3	5	7.5
Inverter Output	Heavy Duty	Rated Output Current (A)	1.1	1 .8	2.9	4.2	6.5	9.5
		Rated Output Current (A)	2.8	4.8	7.5	11	17	25
		Carrier Frequency (kHz)	2~15 (default 4)					
	Normal Duty	Rated Output Current (A)	1.2	1.9	3.0	4.8	7.4	10.3
		Rated Output Current (A)	3.2	5	8	12.5	19.5	27
		Carrier Frequency (kHz)	2~15 (default 4)					
Input	Heavy Duty	Rated Output Current (A)	3.4	5.8	9.0	13.2	20.4	30
	Normal Duty	Rated Output Current (A)	3.8	6.0	9.6	15	23.4	32.4
	Rated Voltage/Frequency		3-phase AC 200 V~240 V · 50/60 Hz					
	Operating Voltage (V_{AC})		170~264 (-15%~+10%)					
	Mains Frequency Range (Hz)		47~63					
Net Weight (kg)			2.3	2.45	2.75	3.4	3.5	4.25
Cooling Method			Natural air cooling			Fan cooling		
EMC Filter			Optional					
Protection Rating			IP66 / NEMA 4X					

3-phase 460 V											
Frame			A							B		
VFD_ _ _ _ _ _ _SAA			1A5MS43_ _		2A7MS43_ _		4A2MS43_ _		5A5MS43MN	5A5MS43MF	9A0MS43_ _	
			M N	M F	M N	M F	M N	M F			M N	M F
Applicable Motor Output (kW)			0.4		0.75		1.5		2.2	2.2	3.7	
Applicable Motor Output (HP)			0.5		1		2		3	3	5	
Inverter Output	Heavy Duty	Rated Output Current (A)	1.1		2.1		3.2		4.2	4.2	6.9	
		Rated Output Current (A)	1.5		2.7		4.2		5.5	5.5	9	
		Carrier Frequency (kHz)	2~15 (default 4)									
	Normal Duty	Rated Output Current (A)	1.4		2.3		3.5		5.0	5.0	8.0	
		Rated Output Current (A)	1.8		3		4.6		6.5	6.5	10.5	
		Carrier Frequency (kHz)	2~15 (default 4)									
Input	Heavy Duty	Rated Output Current (A)	2.1		3.7		5.8		6.1	6.1	9.9	
	Normal Duty	Rated Output Current (A)	2.5		4.2		6.4		7.2	7.2	11.6	
	Rated Voltage/Frequency		3-phase AC 380 V~480 V · 50/60 Hz									
	Operating Voltage (V_{AC})		323~528 (-15%~+10%)									
	Mains Frequency Range (Hz)		47~63									
Net Weight (kg)			2.35	2.65	2.6	2.8	2.8	3.1	3.6	3.8	3.45	3.95
Cooling Method			Natural air cooling							Fan cooling		
EMC Filter			Optional	Built-in	Optional	Built-in	Optional	Built-in	Optional	Built-in	Optional	Built-in
Protection Rating			IP66 / NEMA 4X									

3-phase 460 V						
Frame			c			
VFD_ _ _ _ _ _ _SAA			13AMS43_ _		17AMS43_ _	
			M N	M F	M N	M F
Applicable Motor Output (kW)			5.5		7.5	
Applicable Motor Output (HP)			7.5		10	
Inverter Output	Heavy Duty	Rated Output Current (A)	9.9		13	
		Rated Output Current (A)	13		17	
		Carrier Frequency (kHz)	2~15 (default 4)			
	Normal Duty	Rated Output Current (A)	12		15.6	
		Rated Output Current (A)	15.7		20.5	
		Carrier Frequency (kHz)	2~15 (default 4)			
Input	Heavy Duty	Rated Output Current (A)	14.3		18.7	
	Normal Duty	Rated Output Current (A)	17.3		22.3	
	Rated Voltage/Frequency		3-phase AC 380 V~480 V · 50/60 Hz			
	Operating Voltage (V_{AC})		323~528 (-15%~+10%)			
	Mains Frequency Range (Hz)		47~63			
Net Weight (kg)			4.25	4.95	4.25	5.05
Cooling Method			Fan cooling			
EMC Filter			Optional	Built-in	Optional	Built-in
Protection Rating			IP66 / NEMA 4X			

General Specifications and Accessories

Control Functions	Control Methods	V/F, SVC, FOC Sensorless
	Applicant Motors	Induction motors (IM), interior permanent magnet (IPM) motors, and surface permanent magnet (SPM) motors
	Max. Output Frequency	Standard model: 599.00 Hz / High speed model: 1500.0 Hz (with derating, V/F control only)
	Starting Torque*	150% / 3 Hz (V/f, SVC control for IM, heavy duty) 100% / (1/20 of motor rated frequency) (SVC control for PM, heavy duty) 200% / 0.5 Hz (FOC Sensorless control for IM, heavy duty)
	Speed Control Range*	1:50 (V/f, SVC control for IM, heavy duty) 1:20 (SVC control for PM, heavy duty) 1:100 (FOC Sensorless control for IM, heavy duty)
	Overload Tolerance	Normal Duty (ND): 120% of rated output current for 60 seconds; 150% of rated output current for 3 seconds Heavy Duty (HD): 150% of rated output current for 60 seconds; 200% of rated output current for 3 seconds
	Frequency Setting Signal	0 ~ +10 V / -10 V ~ +10 V, 4 ~ 20 mA / 0 ~ +10 V, 1 pulse input (33 kHz), 1 pulse output (33 kHz)
	Main Control Functions	Multiple motor switches (max. 4 independent motor parameter settings), fast run, Deceleration Energy Back (DEB) function, wobble frequency function, fast deceleration function, master and auxiliary frequency source selectable, momentary power loss ride thru, speed search, over-torque detection, 16-step speed (max.), accel/decel time switch, S-curve accel/decel, 3-wire sequence, JOG frequency, upper/lower limits for frequency reference, DC injection braking at start and stop, 2 sets of PID controls , built-in PLC (2k steps), simple positioning function, Modbus integrated as standard
Protection Functions	Motor Protection	Overcurrent protection, overvoltage protection, over-temperature protection, phase failure protection
	Stall Prevention	Stall prevention during acceleration, deceleration and running independently
Accessories	Communication Cards	PROFIBUS DP, DeviceNet, Modbus TCP, EtherNet/IP, CANopen, EtherCAT
	External DC power supply	EMM-BPS01 (DC 24V power supply card)
Digital Controller		A removable keypad as standard
Certifications		UL, CE, RoHS, RCM, TUV, REACH

***Control accuracy may vary depending on the environment, application conditions, different motors or encoder. For details, please contact our company or your local distributor.**

MS300 Operating Environment

Operating Environment	Installation Location		IEC60364-1 / IEC60664-1 Pollution degree 2, Indoor use only	
	Ambient Temperature (˚C)	Operation	IP20 / UL Open Type	-20 to 50 -20 to 60 (needs derating)
			IP40 / NEMA 1 / UL Type 1	-20 to 40 -20 to 50 (needs derating)
			IP66 / NEMA 4X / UL Type 4X	
			Zero stacking Installation	
		Storage		-40 to 85
		Transportation		-20 to 70
	Rated Humidity	Operation		Max. 90%
		Storage / Transportation		Max. 95%
	Air Pressure (kPa)	Operation		86 ~ 106
		Storage / Transportation		70 ~ 106
	Pollution Level	Compliance to IEC60721-3-3, 3C2		
	Altitude	An altitude of 0 ~ 1000 m for normal operation (derating is required for installation at an altitude above 1000 m)		
Vibration		Compliance to IEC 60068-2-6		
Shock		Compliance to IEC/EN 60068-2-27		

Please refer to MS300 user manual for more details.

Wiring

Input: Single-phase / 3-phase power

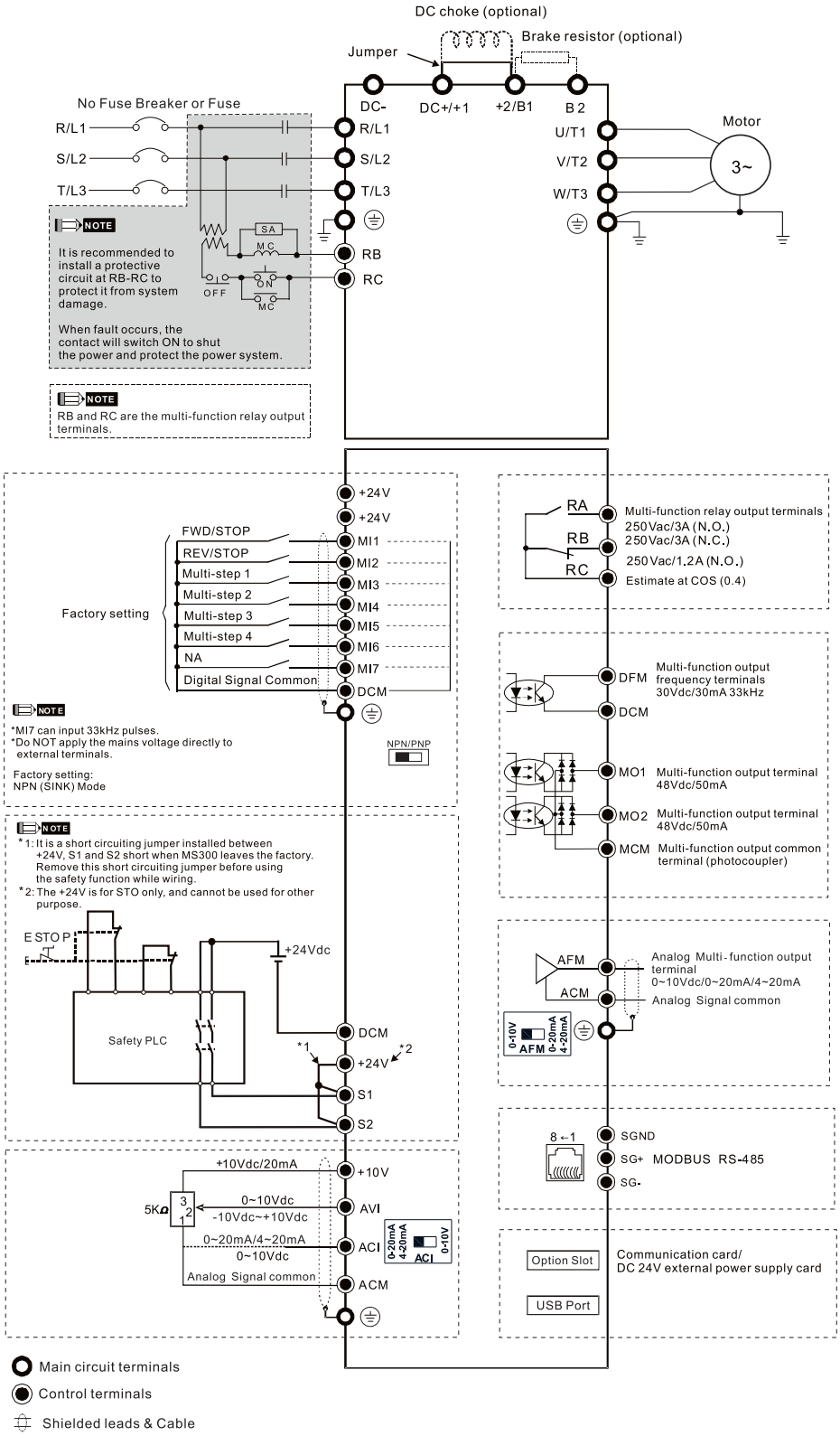

Dimensions - IP20 / IP40 Models

Frame A

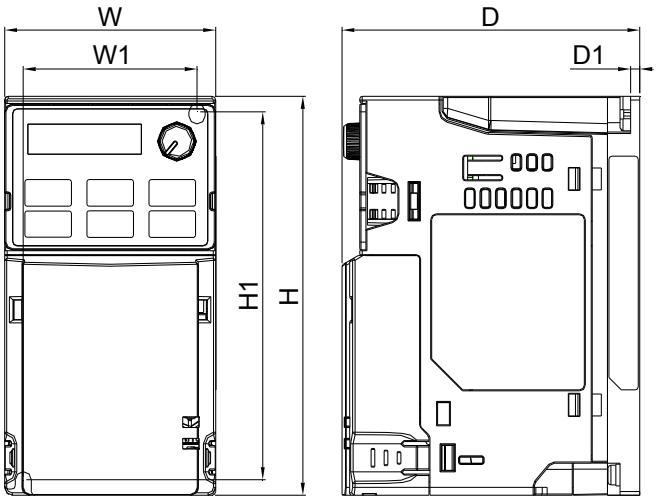

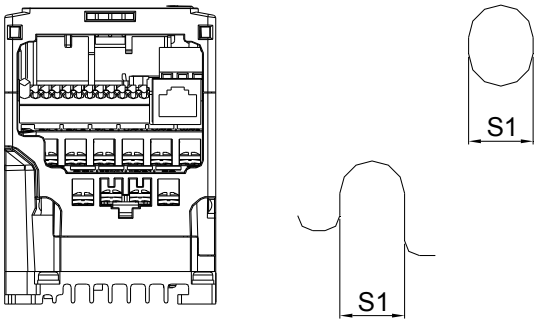

Mounting hole

MODEL FRAME A1	FRAME A2	FRAME A3	FRAME A4	FRAME A5
VFD1A6MS11ANSAA	VFD2A8MS23ANSAA	VFD2A5MS11ANSAA	VFD1A5MS43ANSAA	VFD4A8MS23ANSAA
VFD1A6MS11ENSAA	VFD2A8MS23ENSAA	VFD2A5MS11ENSAA	VFD1A5MS43ENSAA	VFD4A8MS23ENSAA
VFD1A6MS21ANSAA		VFD2A8MS21ANSAA		VFD2A7MS43ANSAA
VFD1A6MS21ENSAA		VFD2A8MS21ENSAA		VFD2A7MS43ENSAA
VFD1A6MS23ANSAA				VFD1A7MS53ANSAA
VFD1A6MS23ENSAA				

Frame		W	H	D	W1	H1	D1	S1
A1	mm	68.0	128.0	96.0	56.0	118.0	3.0	5.2
	inch	2.68	5.04	3.78	2.20	4.65	0.12	0.20
Frame		**W**	**H**	**D**	**W1**	**H1**	**D1**	**S1**
A2	mm	68.0	128.0	110.0	56.0	118.0	3.0	5.2
	inch	2.68	5.04	4.33	2.20	4.65	0.12	0.20
Frame		**W**	**H**	**D**	**W1**	**H1**	**D1**	**S1**
A3	mm	68.0	128.0	125.0	56.0	118.0	3.0	5.2
	inch	2.68	5.04	4.92	2.20	4.65	0.12	0.20

Frame		W	H	D	W1	H1	D1	S1
A4	mm	68.0	128.0	129.0	56.0	118.0	3.0	5.2
	inch	2.68	5.04	5.08	2.20	4.65	0.12	0.20
Frame		**W**	**H**	**D**	**W1**	**H1**	**D1**	**S1**
A5	mm	68.0	128.0	143.0	56.0	118.0	3.0	5.2
	inch	2.68	5.04	5.63	2.20	4.65	0.12	0.20

Frame B

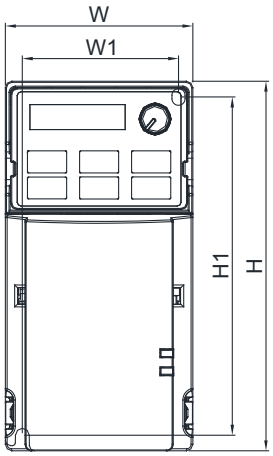

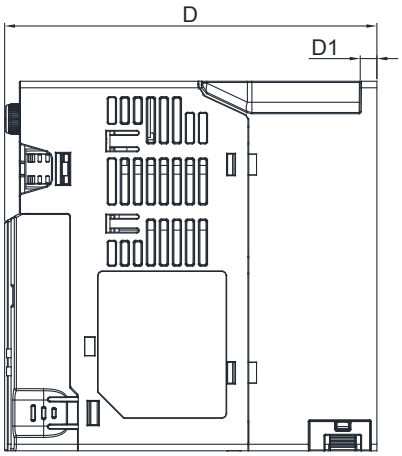

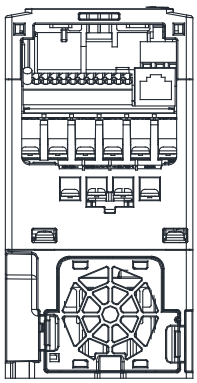

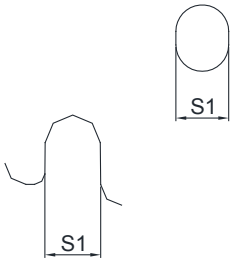

Mounting hole

MODEL FRAME B1		FRAME B2	FRAME B3	
Standard Models: VFD7A5MS23ANSAA VFD7A5MS23ENSAA VFD4A2MS43ANSAA VFD4A2MS43ENSAA VFD3A0MS53ANSAA	High Speed Models: VFD7A5MS23ANSHA VFD7A5MS23ENSHA VFD4A2MS43ANSHA VFD4A2MS43ENSHA	Standard Models: VFD4A8MS21ANSAA VFD4A8MS21ENSAA	Standard Models: VFD1A6MS21AFSAA VFD2A8MS21AFSAA VFD4A8MS21AFSAA VFD1A5MS43AFSAA VFD2A7MS43AFSAA VFD4A2MS43AFSAA	High Speed Models: VFD4A2MS43AFSHA

Frame		W	H	D	W1	H1	D1	S1
B1	mm	72.0	142.0	143.0	60.0	130.0	6.4	5.2
	inch	2.83	5.59	5.63	2.36	5.12	0.25	0.20
Frame		**W**	**H**	**D**	**W1**	**H1**	**D1**	**S1**
B2	mm	72.0	142.0	143.0	60.0	130.0	3.0	5.2
	inch	2.83	5.59	5.63	2.36	5.12	0.12	0.20
Frame		**W**	**H**	**D**	**W1**	**H1**	**D1**	**S1**
B3	mm	72.0	142.0	159.0	60.0	130.0	4.3	5.2
	inch	2.83	5.59	6.26	2.36	5.12	0.17	0.20

Dimensions - IP20 / IP40 Models

Frame C

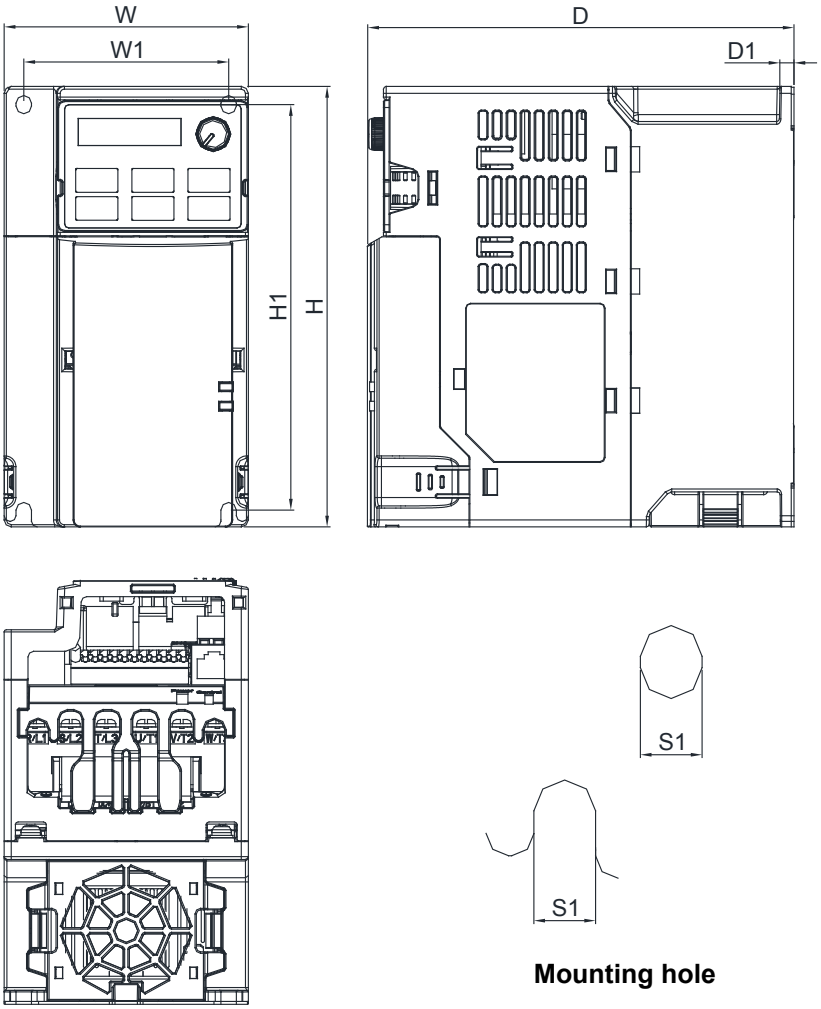

Mounting hole

MODEL

FRAME C1

Standard Models:		High Speed Models:	
VFD4A8MS11ANSAA	VFD4A8MS11ENSAA	VFD7A5MS21ANSHA	VFD7A5MS21ENSHA
VFD7A5MS21ANSAA	VFD7A5MS21ENSAA	VFD11AMS21ANSHA	VFD11AMS21ENSHA
VFD11AMS21ANSAA	VFD11AMS21ENSAA	VFD11AMS23ANSHA	VFD11AMS23ENSHA
VFD11AMS23ANSAA	VFD11AMS23ENSAA	VFD17AMS23ANSHA	VFD17AMS23ENSHA
VFD17AMS23ANSAA	VFD17AMS23ENSAA	VFD5A5MS43ANSHA	VFD5A5MS43ENSHA
VFD5A5MS43ANSAA	VFD5A5MS43ENSAA	VFD9A0MS43ANSHA	VFD9A0MS43ENSHA
VFD9A0MS43ANSAA	VFD9A0MS43ENSAA		
VFD4A2MS53ANSAA	VFD6A6MS53ANSAA		

FRAME C2

Standard Models:	High Speed Models:
VFD7A5MS21AFSAA	VFD7A5MS21AFSHA
VFD11AMS21AFSAA	VFD11AMS21AFSHA
VFD5A5MS43AFSAA	VFD5A5MS43AFSHA
VFD9A0MS43AFSAA	VFD9A0MS43AFSHA

Frame		W	H	D	W1	H1	D1	S1
C1	mm	87.0	157.0	152.0	73.0	144.5	5.0	5.5
	inch	3.43	6.18	5.98	2.87	5.69	0.20	0.22
Frame		**W**	**H**	**D**	**W1**	**H1**	**D1**	**S1**
C2	mm	87.0	157.0	179.0	73.0	144.5	5.0	5.5
	inch	3.43	6.18	7.05	2.87	5.69	0.20	0.22

Frame D

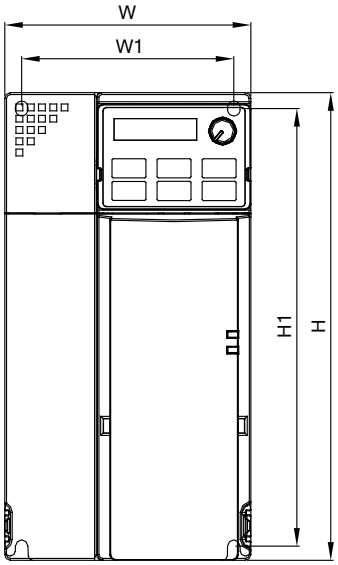

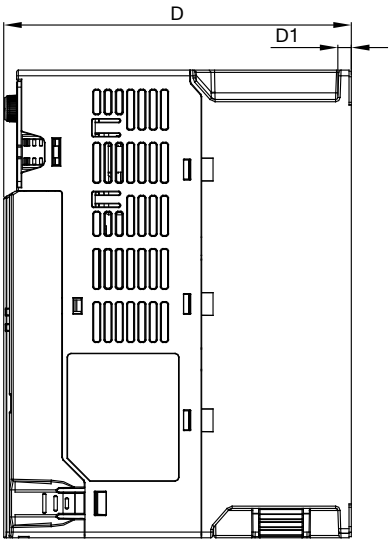

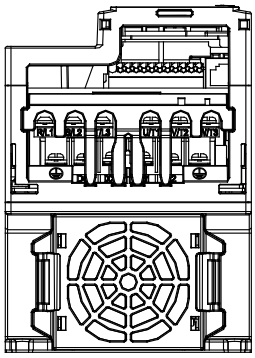

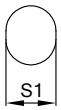

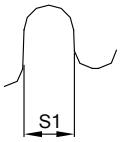

Mounting hole

MODEL FRAME D1		FRAME D2	
Standard Models:	High Speed Models:	Standard Models:	High Speed Models:
VFD25AMS23ANSAA	VFD25AMS23ANSHA	VFD13AMS43AFSAA	VFD13AMS43AFSHA
VFD25AMS23ENSAA	VFD25AMS23ENSHA	VFD17AMS43AFSAA	VFD17AMS43AFSHA
VFD13AMS43ANSAA	VFD13AMS43ANSHA		
VFD13AMS43ENSAA	VFD13AMS43ENSHA		
VFD17AMS43ANSAA	VFD17AMS43ANSHA		
VFD17AMS43ENSAA	VFD17AMS43ENSHA		
VFD9A9MS53ANSAA	VFD12AMS53ANSAA		

Frame		W	H	D	W1	H1	D1	S1
D1	mm	109.0	207.0	154.0	94.0	193.8	6.0	5.5
	inch	4.29	8.15	6.06	3.70	7.63	0.24	0.22
Frame		**W**	**H**	**D**	**W1**	**H1**	**D1**	**S1**
D2	mm	109.0	207.0	187.0	94.0	193.8	6.0	5.5
	inch	4.29	8.15	7.36	3.70	7.36	0.24	0.22

Dimensions - IP20 / IP40 Models

Frame E

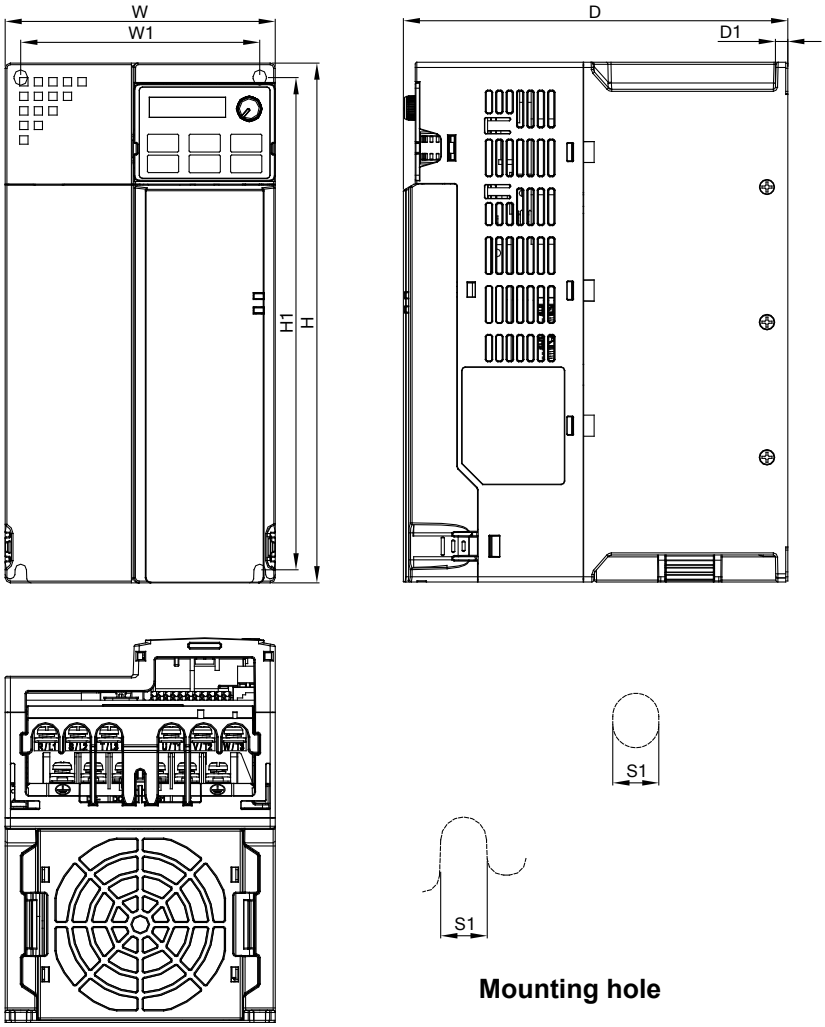

Mounting hole

MODEL FRAME E1		FRAME E2	
Standard Models:	High Speed Models:	Standard Models:	High Speed Models:
VFD33AMS23ANSAA	VFD33AMS23ANSHA	VFD25AMS43AFSAA	VFD25AMS43AFSHA
VFD33AMS23ENSAA	VFD33AMS23ENSHA	VFD32AMS43AFSAA	VFD32AMS43AFSHA
VFD49AMS23ANSAA	VFD49AMS23ANSHA		
VFD49AMS23ENSAA	VFD49AMS23ENSHA		
VFD25AMS43ANSAA	VFD25AMS43ANSHA		
VFD25AMS43ENSAA	VFD25AMS43ENSHA		
VFD32AMS43ANSAA	VFD32AMS43ANSHA		
VFD32AMS43ENSAA	VFD32AMS43ENSHA		

Frame		W	H	D	W1	H1	D1	S1
E1	mm	130.0	250.0	185.0	115.0	236.8	6.0	5.5
	inch	5.12	9.84	7.83	4.53	9.32	0.24	0.22
Frame		**W**	**H**	**D**	**W1**	**H1**	**D1**	**S1**
E2	mm	130.0	250.0	219.0	115.0	236.8	6.0	5.5
	inch	5.12	9.84	8.62	4.53	9.32	0.24	0.22

Frame F

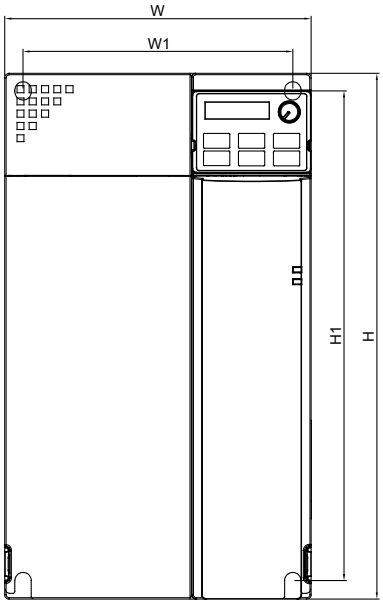

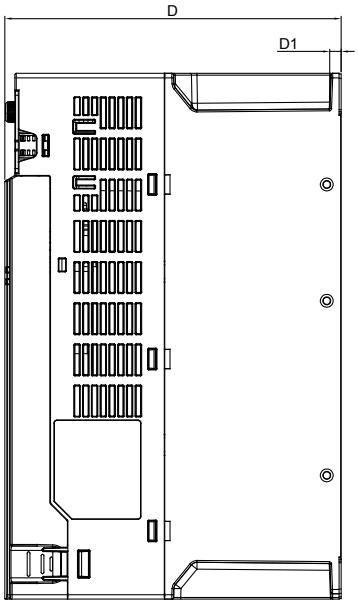

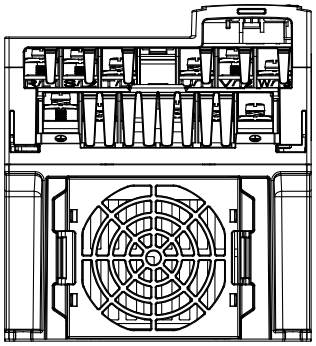

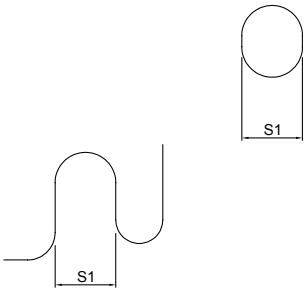

Mounting hole

MODEL FRAME F1		FRAME F2	
Standard Models:	High Speed Models:	Standard Models:	High Speed Models:
VFD65AMS23ANSAA	VFD65AMS23ANSHA	VFD38AMS43AFSAA	VFD38AMS43AFSHA
VFD65AMS23ENSAA	VFD65AMS23ENSHA	VFD45AMS43AFSAA	VFD45AMS43AFSHA
VFD38AMS43ANSAA	VFD38AMS43ANSHA		
VFD38AMS43ENSAA	VFD38AMS43ENSHA		
VFD45AMS43ANSAA	VFD45AMS43ANSHA		
VFD45AMS43ENSAA	VFD45AMS43ENSHA		

Frame		W	H	D	W1	H1	D1	S1
F1	mm	175.0	300.0	192.0	154.0	279.5	6.5	8.4
	inch	6.89	11.81	7.56	6.06	11.00	0.26	0.33
Frame		**W**	**H**	**D**	**W1**	**H1**	**D1**	**S1**
F2	mm	175.0	300.0	244.0	154.0	279.5	6.5	8.4
	inch	6.89	11.81	9.61	6.06	11.00	0.26	0.33

Dimensions - IP66 / NEMA 4X Models

Frame A

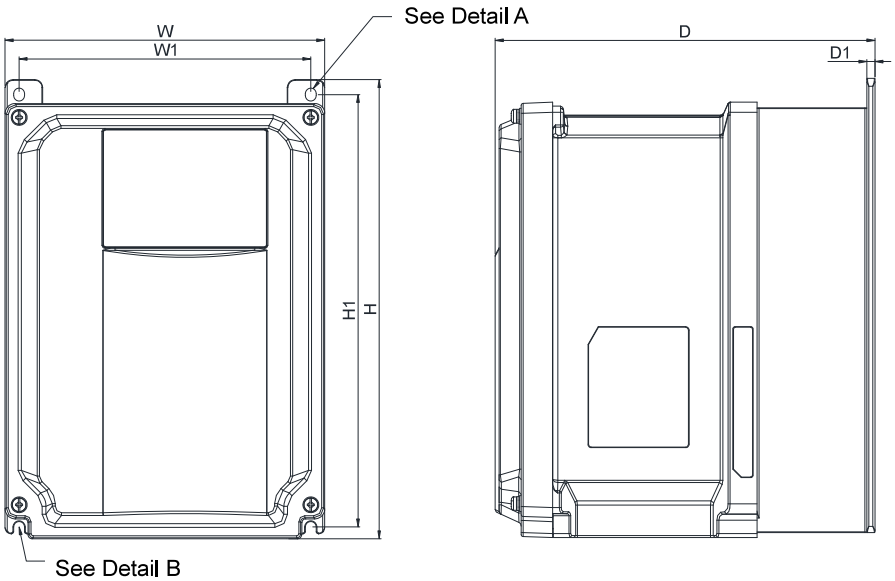

MODEL FRAME A1		FRAME A2	FRAME A3
VFD2A8MS21MNSAA	VFD2A8MS23MNSAA	VFD7A5MS21MNSAA	VFD5A5MS43MNSAA
VFD1A5MS43MFSAA	VFD4A8MS21MFSAA	VFD7A5MS23MNSAA	
VFD2A7MS43MNSAA	VFD1A5MS43MNSAA	VFD4A2MS43MNSAA	
VFD2A8MS21MFSAA	VFD4A8MS23MNSAA	VFD4A2MS43MFSAA	
VFD4A8MS21MNSAA			
VFD2A7MS43MFSAA			

Frame		W	H	D	W1	H1	D1	S1
A1	mm	160.0	230.0	151.0	146.0	216.5	4.0	5.5
	inch	6.30	9.06	6.57	5.75	8.52	0.16	0.22
Frame		**W**	**H**	**D**	**W1**	**H1**	**D1**	**S1**
A2	mm	160.0	230.0	167.0	146.0	216.5	4.0	5.5
	inch	6.30	9.06	6.57	5.75	8.52	0.16	0.22
Frame		**W**	**H**	**D**	**W1**	**H1**	**D1**	**S1**
A3	mm	160.0	230.0	190.0	146.0	216.5	4.0	5.5
	inch	6.30	9.06	7.48	5.75	8.52	0.16	0.22

Frame B

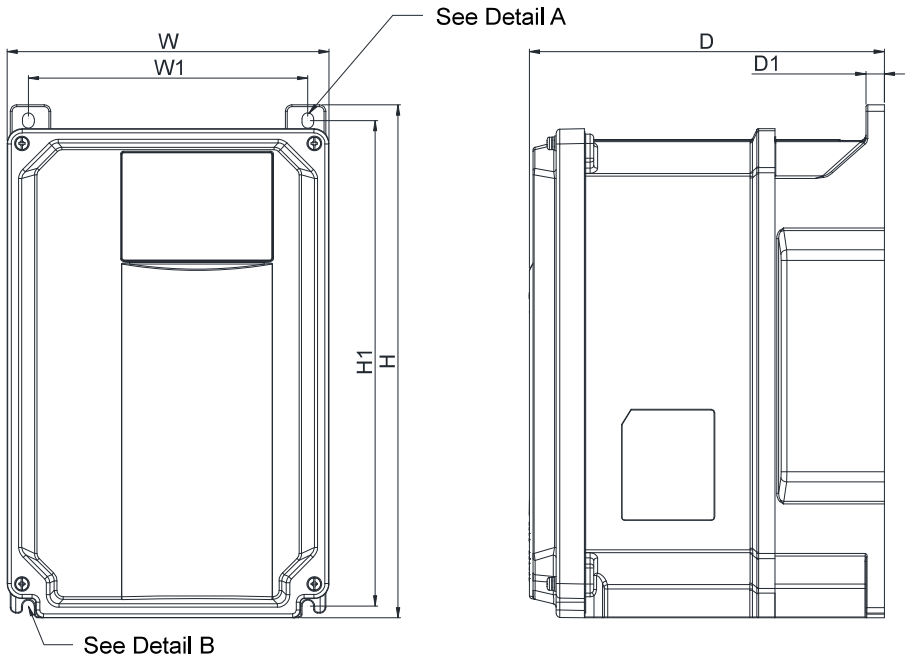

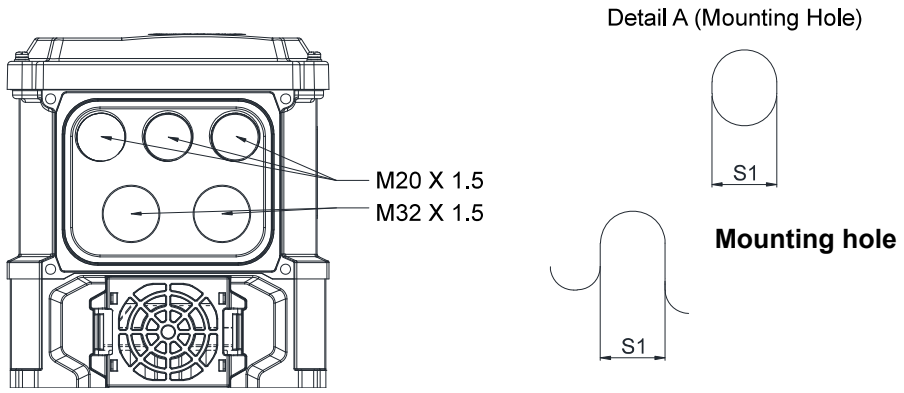

MODEL
FRAME B

VFD7A5MS21MFSAA	VFD11AMS21MNSAA	VFD11AMS21MFSAA	VFD11AMS23MNSAA
VFD5A5MS43MFSAA	VFD17AMS23MNSAA	VFD9A0MS43MNSAA	VFD9A0MS43MFSAA

Frame		W	H	D	W1	H1	D1	S1
B	mm	175.0	280.0	193.0	152.0	266.0	10	6.4
	inch	6.89	11.02	7.60	5.98	10.43	0.39	0.25

Frame C

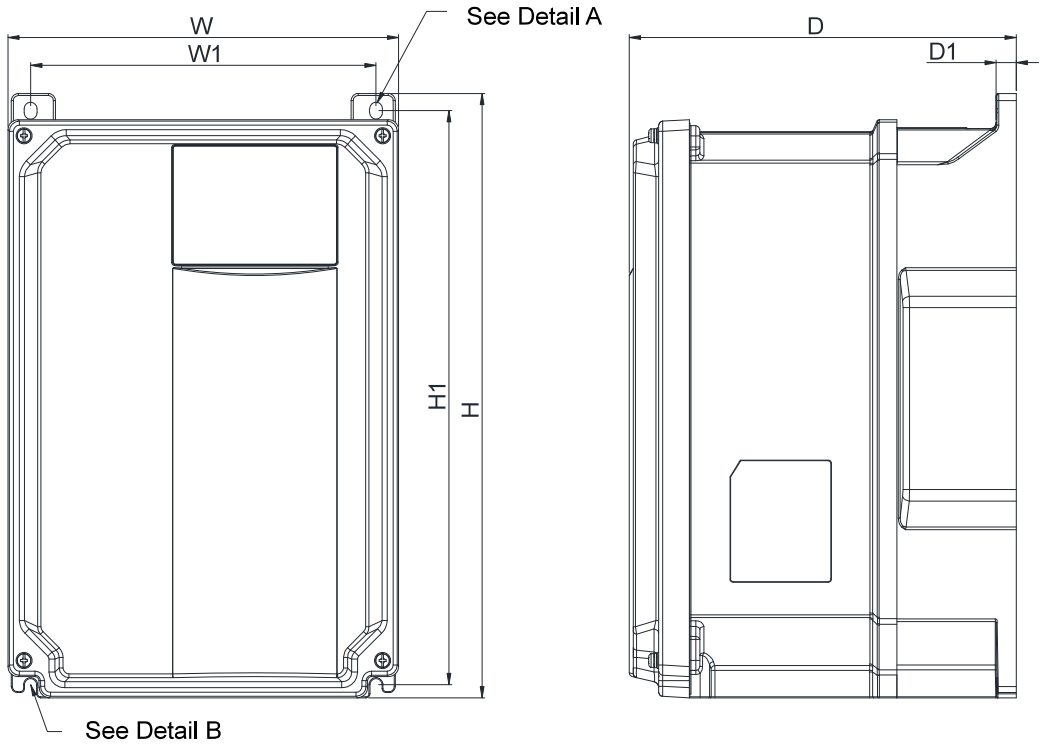

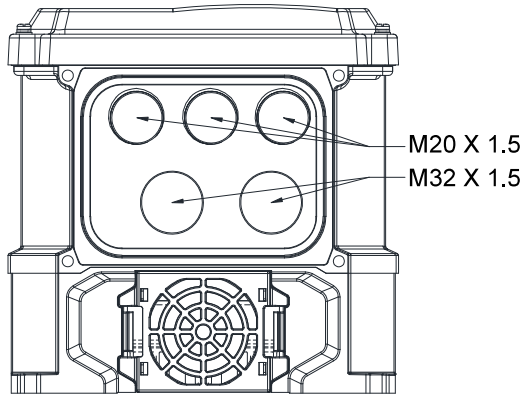

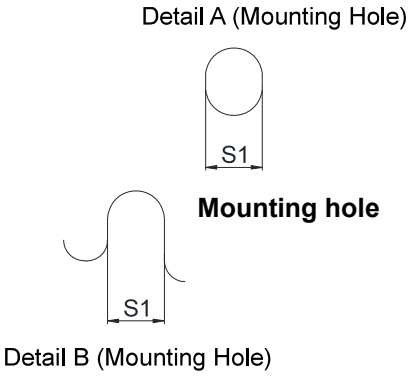

MODEL
FRAME C

VFD13AMS43MNSAA VFD13AMS43MFSAA VFD25AMS23MNSAA VFD17AMS43MNSAA
VFD17AMS43MFSAA

Frame		W	H	D	W1	H1	D1	S1
C	mm	195.0	300.0	193.0	172.4	285.0	10	6.4
	inch	7.68	11.81	7.606	6.79	11.22	0.39	0.25

Accessories

The matched connection cables (CBM-CLxxA 、CBM-CCxxA) are required for usage.
Please refer to the user manual for detailed ordering information.

▪ EtherNet/IP Option Card

CMM-EIP02 / CMM-EIP03 NEW

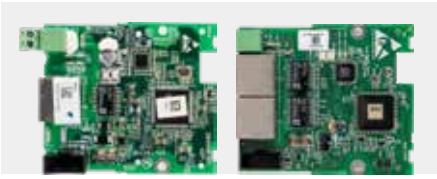

Features

- Supports max. 32 words input and 32 words output of I/O connection
- User-defined parameter mapping
- IP Filter, basic firewall function
- Supports DLR ring nodes
  *Applicable to CMM-EIP03

Network Interface

Network protocol	DHCP、BOOTP、EtherNet/IP、Modbus TCP	Interface	RJ-45
Transmission speed	10 / 100Mbps	Number of port	1 (CMM-EIP02) / 2 (CMM-EIP03)
Transmission method	I/O connection / Explicit message	Transmission cable	Category 5e shielding
Transmission distance	100 m, extension is allowed via switch		

▪ DeviceNet Option Card

CMM-DN02

Features

- Support Group 2 only connection method and cyclic I/O data exchange
- Provides EDS file to identify DeviceNet equipment information
- Supports max. 32 words input and 32 words output of parameter mapping and remote I/O function
- Node address and Baud rate can be set in the AC motor drive

Network Interface

Network protocol	DeviceNet	Interface	Terminal block
Transmission speed	500k / 250k / 125k / 100k / 50k bps and extendable baud rate mode of 1M	Number of port	1
Transmission method	Explicit message / Implicit message	Transmission cable	Delta standard
Transmission distance	25 m / 1Mbps		

▪ CANopen Option Card

CMM-COP02

Features

- Complies with CiA 402 standard (default setting)
- 4 sets of RX/TX PDO
- Dual communication ports
- Node address and Baud rate can be set in the AC motor drive
- Supports Delta protocol, DMCNET
- Supports remote I/O function

Network Interface

Network protocol	CANopen	Interface	RJ-45
Transmission speed	1Mbps / 500 Kbps / 250 Kbps / 125 Kbps / 100 Kbps / 50 Kbps	Number of port	2
Transmission method	PDO, SDO	Transmission cable	Delta standard
Transmission distance	25 m / 1Mbps		

PROFIBUS DP Option Card

CMM-PD02

Features

- Supports PZD cyclic data exchange
- Supports PKW read/write to AC motor drive parameters
- Supports user diagnosis function
- Auto-detects baud rates; supports Max.12 Mbps.
- Supports remote I/O function

Network Interface

Network protocol	PROFIBUS DP	Interface	DB9
Transmission speed	9.6k/19.2k/93.75k/187.5k/500k/1.5M/3M/6M/12Mbps	Number of port	1
Transmission method	Cyclic/non-cyclic data exchange	Transmission cable	Delta standard
Transmission distance	100 m/12Mbps		

EtherCAT Option Card NEW

CMM-EC02

Features

- Supports Ethernet CAT protocol
- Supports standard CiA402 speed mode
- Supports SDO (Service Data Objects) function: Drive status reading and parameters editing
- Auto shutdown function for interruptions during data transmission
- Supports remote I/O function

Network Interface

Interface	RJ-45	Transmission cable	Category 5e shielding 100 M
Number of ports	2 Ports	Transmission speed	100 Mbps
Transmission method	IEEE 802.3, IEEE 802.3u	Network protocol	EtherCAT

24V Power Shift Card

EMM-BPS02

Terminals	Description
PE GND 24 V	When the AC motor drive power is off, the external power supply card provides external power to the network system, PLC function, and other functions to allow continued operations. Input power: 24 V ± 5% Maximum input current: 0.5 A Note: 1) Do not connect the control terminal +24 V (Digital control signal common: SOURCE) directly to the EMC-BPS01 input terminal 24 V. 2) Do not connect control terminal GND directly to the EMC-BPS01 input terminal GND in oder to achieve good isolation.

Note 1: For the Open Collector, set input voltage to 5~15 mA and install a pull-up resistor
[5 V] Recommend pull-up resistor: 100~220 Ω, 1/2 W and above
[12 V] Recommend pull-up resistor: 510~1.35 KΩ, 1/2 W and above
[24 V] Recommend pull-up resistor: 1.8 K~3.3 KΩ, 1/2 W and above

Screw Specification of Option Card Terminals

Screw Specification of Option Card Terminals	Wire Gauge	Torque
CMM-COP02	30~16 AWG (0.0509 ~ 1.31 mm^2)	2 Kg-cm [1.74 lb-in]
CMM-EIP02/CMM-EIP03		
CMM-PD02		
CMM-DN02		
EMM-BPS02	30~16 AWG (0.0509 ~ 1.31 mm^2)	8 Kg-cm [6.94 lb-in]

Accessories

▪ Standard Fieldbus Cables

Delta Cables	Part Number	Description	Length
CANopen Cable	UC-CMC003-01A	CANopen cable, RJ45 connector	0.3 m
	UC-CMC005-01A	CANopen cable, RJ45 connector	0.5 m
	UC-CMC010-01A	CANopen cable, RJ45 connector	1 m
	UC-CMC015-01A	CANopen cable, RJ45 connector	1.5 m
	UC-CMC020-01A	CANopen cable, RJ45 connector	2 m
	UC-CMC030-01A	CANopen cable, RJ45 connector	3 m
	UC-CMC050-01A	CANopen cable, RJ45 connector	5 m
	UC-CMC100-01A	CANopen cable, RJ45 connector	10 m
	UC-CMC200-01A	CANopen cable, RJ45 connector	20 m
DeviceNet Cable	UC-DN01Z-01A	DeviceNet cable	305 m
	UC-DN01Z-02A	DeviceNet cable	305 m
EtherNet/EtherCAT Cable	UC-EMC003-02A	EtherNet/EtherCAT cable, Shielding	0.3 m
	UC-EMC005-02A	EtherNet/EtherCAT cable, Shielding	0.5 m
	UC-EMC010-02A	EtherNet/EtherCAT cable, Shielding	1 m
	UC-EMC020-02A	EtherNet/EtherCAT cable, Shielding	2 m
	UC-EMC050-02A	EtherNet/EtherCAT cable, Shielding	5 m
	UC-EMC100-02A	EtherNet/EtherCAT cable, Shielding	10 m
	UC-EMC200-02A	EtherNet/EtherCAT cable, Shielding	20 m
CANopen/DeviceNet TAP	TAP-CN01	1 in 2 out, built-in 121Ω terminal resistor	1 in 2 out
	TAP-CN02	1 in 4 out, built-in 121Ω terminal resistor	1 in 4 out
	TAP-CN03	1 in 4 out, RJ45 connector, built-in 121Ω terminal resistor	1 in 4 out
PROFIBUS Cable	UC-PF01Z-01A	PROFIBUS DP cable	305 m

▪ Extension Cable for Digital Keypad

Part No.	L	
	mm	[inch]
EG0610C	600	23.6
EG1010C	1000	39.4
EG2010C	2000	78.7
EG3010C	3000	118.1
EG5010C	5000	196.8

Model Name Explanation

VFD 1A5 MS 43 A N S A A

Variable Frequency Drive

Rated Output Current

Under Heavy Duty Mode (150% 60 seconds)

Series Name

MS: Standard MS300

Input Voltage

11: 115 V single-phase
21: 230 V single-phase
23: 230 V 3-phase
43: 460 V 3-phase
53: 575V 3-phase*

IP Level

A: IP20
E: IP40 (Anti-dust)
M : IP66/NEMA 4X

EMC Filter

N: None
F: Built-in EMC Filter

Safe Torque Off (STO)

S: Integrated STO

Model Type

A: Standard Model
H: High Speed Model
(IP66 models not supported)

Version

*Only for models with ANSAA at the end of model names

Ordering Information

IP20 / IP40 Standard Models (0 ~ 599 Hz)

Power Range			Frame Size	Model Name	Built-in EMC Filter	IP40 Models
Max. Applicable Motor Capacity		Drive Rated Output Current				
[HP]	[kW]	[A]				
115 V / single-phase						
0.25	0.2	1.6	A	VFD1A6MS11ANSAA	-	-
				VFD1A6MS11ENSAA	-	V
0.5	0.4	2.5	A	VFD2A5MS11ANSAA	-	-
				VFD2A5MS11ENSAA	-	V
1	0.75	4.8	C	VFD4A8MS11ANSAA	-	-
				VFD4A8MS11ENSAA	-	V
230 V / single-phase						
1/4	0.2	1.6	A	VFD1A6MS21ANSAA	-	-
			A	VFD1A6MS21ENSAA	-	V
			B	VFD1A6MS21AFSAA	V	-
0.5	0.4	2.8	A	VFD2A8MS21ANSAA	-	-
			A	VFD2A8MS21ENSAA	-	V
			B	VFD2A8MS21AFSAA	V	-
1	0.75	4.8	B	VFD4A8MS21ANSAA	-	-
				VFD4A8MS21AFSAA	V	-
				VFD4A8MS21ENSAA	-	V
2	1.5	7.5	C	VFD7A5MS21ANSAA	-	-
				VFD7A5MS21AFSAA	V	-
				VFD7A5MS21ENSAA	-	V
3	2.2	11.0	C	VFD11AMS21ANSAA	-	-
				VFD11AMS21AFSAA	V	-
				VFD11AMS21ENSAA	-	V
230 V / 3-phase						
0.25	0.2	1.6	A	VFD1A6MS23ANSAA	-	-
				VFD1A6MS23ENSAA	-	V
0.5	0.4	2.8	A	VFD2A8MS23ANSAA	-	-
				VFD2A8MS23ENSAA	-	V
1	0.75	4.8	A	VFD4A8MS23ANSAA	-	-
				VFD4A8MS23ENSAA	-	V
2	1.5	7.5	B	VFD7A5MS23ANSAA	-	-
				VFD7A5MS23ENSAA	-	V
3	2.2	11.0	C	VFD11AMS23ANSAA	-	-
				VFD11AMS23ENSAA	-	V
5	3.7 / 4	17.0	C	VFD17AMS23ANSAA	-	-
				VFD17AMS23ENSAA	-	V
7.5	5.5	25.0	D	VFD25AMS23ANSAA	-	-
				VFD25AMS23ENSAA	-	V
10	7.5	33.0	E	VFD33AMS23ANSAA	-	-
				VFD33AMS23ENSAA	-	V
15	11	49.0	E	VFD49AMS23ANSAA	-	-
				VFD49AMS23ENSAA	-	V
20	15	65.0	F	VFD65AMS23ANSAA	-	-
				VFD65AMS23ENSAA	-	V

Power Range			Frame Size	Model Name	Built-in EMC Filter	IP40 Models
Max. Applicable Motor Capacity		Drive Rated Output Current				
[HP]	[kW]	[A]				
460 V / 3-phase						
0.5	0.4	1.5	A	VFD1A5MS43ANSAA	-	-
			A	VFD1A5MS43ENSAA	-	V
			B	VFD1A5MS43AFSAA	V	-
1	0.75	2.7	A	VFD2A7MS43ANSAA	-	-
			A	VFD2A7MS43ENSAA	-	V
			B	VFD2A7MS43AFSAA	V	-
2	1.5	4.2	B	VFD4A2MS43ANSAA	-	-
				VFD4A2MS43ENSAA	-	V
				VFD4A2MS43AFSAA	V	-
3	2.2	5.5	C	VFD5A5MS43ANSAA	-	-
				VFD5A5MS43ENSAA	-	V
				VFD5A5MS43AFSAA	V	-
5	3.7 / 4	9.0	C	VFD9A0MS43ANSAA	-	-
				VFD9A0MS43ENSAA	-	V
				VFD9A0MS43AFSAA	V	-
7.5	5.5	13.0	D	VFD13AMS43ANSAA	-	-
				VFD13AMS43ENSAA	-	V
				VFD13AMS43AFSAA	V	-
10	7.5	17.0	D	VFD17AMS43ANSAA	-	-
				VFD17AMS43ENSAA	-	V
				VFD17AMS43AFSAA	V	-
15	11	25.0	E	VFD25AMS43ANSAA	-	-
				VFD25AMS43ENSAA	-	V
				VFD25AMS43AFSAA	V	-
20	15	32.0	E	VFD32AMS43ANSAA	-	-
				VFD32AMS43ENSAA	-	V
				VFD32AMS43AFSAA	V	-
25	18.5	38.0	F	VFD38AMS43ANSAA	-	-
				VFD38AMS43ENSAA	-	V
				VFD38AMS43AFSAA	V	-
30	22	45.0	F	VFD45AMS43ANSAA	-	-
				VFD45AMS43ENSAA	-	V
				VFD45AMS43AFSAA	V	-
575 V / 3-phase						
1	0.75	1.7	A	VFD1A7MS53ANSAA	-	-
2	1.5	3.0	B	VFD3A0MS53ANSAA	-	-
3	2.2	4.2	C	VFD4A2MS53ANSAA	-	-
5	3.7	6.6		VFD6A6MS53ANSAA	-	-
7.5	5.5	9.9	D	VFD9A9MS53ANSAA	-	-
10	7.5	12.2		VFD12AMS53ANSAA	-	-

IP66 Standard Models (0～599 Hz)

Power Range			Frame Size	Model Name	Built-in EMC Filter
Max. Applicable Motor Capacity		Drive Rated Output Current			
[HP]	[kW]	[A]			
230 V / single-phase					
1/2	0.4	2.8	A	VFD2A8MS21MNSAA	-
		2.8		VFD2A8MS21MFSAA	V
1	0.75	4.8	A	VFD4A8MS21MNSAA	-
		4.8		VFD4A8MS21MFSAA	V
2	1.5	7.5	A	VFD7A5MS21MNSAA	-
		7.5	B	VFD7A5MS21MFSAA	V
3	2.2	11	B	VFD11AMS21MNSAA	-
		11		VFD11AMS21MFSAA	V
230 V / 3-phase					
1/2	0.4	2.8	A	VFD2A8MS23MNSAA	-
1	0.75	4.8	A	VFD4A8MS23MNSAA	-
2	1.5	7.5	A	VFD7A5MS23MNSAA	-
3	2.2	11	B	VFD11AMS23MNSAA	-
5	3.7	17	B	VFD17AMS23MNSAA	-
7.5	5.5	25	C	VFD25AMS23MNSAA	-
460 V / 3-phase					
1/2	0.4	1.5	A	VFD1A5MS43MNSAA	-
		1.5		VFD1A5MS43MFSAA	V
1	0.75	2.7	A	VFD2A7MS43MNSAA	-
		2.7		VFD2A7MS43MFSAA	V
2	1.5	4.2	A	VFD4A2MS43MNSAA	-
		4.2		VFD4A2MS43MFSAA	V
3	2.2	5.5	A	VFD5A5MS43MNSAA	-
		5.5	B	VFD5A5MS43MFSAA	V
5	3.7	9	B	VFD9A0MS43MNSAA	-
		9		VFD9A0MS43MFSAA	V
7.5	5.5	13	C	VFD13AMS43MNSAA	-
		13		VFD13AMS43MFSAA	V
10	7.5	17	C	VFD17AMS43MNSAA	-
		17		VFD17AMS43MFSAA	V

IP20 / IP40 High Speed Models (0 ~ 1500 Hz)

Power Range			Frame Size	Model Name	Built-in EMC Filter	IP40 Models
Max. Applicable Motor Capacity		Drive Rated Output Current				
[HP]	[kW]	[A]				
230V / single-phase						
2	1.5	7.5	C	VFD7A5MS21ANSHA	-	-
				VFD7A5MS21ENSHA	-	V
				VFD7A5MS21AFSHA	V	-
3	2.2	11.0	C	VFD11AMS21ANSHA	-	-
				VFD11AMS21ENSHA	-	V
				VFD11AMS21AFSHA	V	-
230V / 3-phase						
2	1.5	7.5	B	VFD7A5MS23ANSHA	-	-
				VFD7A5MS23ENSHA	-	V
3	2.2	11.0	C	VFD11AMS23ANSHA	-	-
				VFD11AMS23ENSHA	-	V
5	3.7 / 4	17.0	C	VFD17AMS23ANSHA	-	-
				VFD17AMS23ENSHA	-	V
7.5	5.5	25.0	D	VFD25AMS23ANSHA	-	-
				VFD25AMS23ENSHA	-	V
10	7.5	33.0	E	VFD33AMS23ANSHA	-	-
				VFD33AMS23ENSHA	-	V
15	11	49.0	E	VFD49AMS23ANSHA	-	-
				VFD49AMS23ENSHA	-	V
20	15	65.0	F	VFD65AMS23ANSHA	-	-
				VFD65AMS23ENSHA	-	V
460V / 3-phase						
2	1.5	4.2	B	VFD4A2MS43ANSHA	-	-
				VFD4A2MS43ENSHA	-	V
				VFD4A2MS43AFSHA	V	-
3	2.2	5.5	C	VFD5A5MS43ANSHA	-	-
				VFD5A5MS43ENSHA	-	V
				VFD5A5MS43AFSHA	V	-
5	3.7 / 4	9.0	C	VFD9A0MS43ANSHA	-	-
				VFD9A0MS43ENSHA	-	V
				VFD9A0MS43AFSHA	V	-
7.5	5.5	13.0	D	VFD13AMS43ANSHA	-	-
				VFD13AMS43ENSHA	-	V
				VFD13AMS43AFSHA	V	-
10	7.5	17.0	D	VFD17AMS43ANSHA	-	-
				VFD17AMS43ENSHA	-	V
				VFD17AMS43AFSHA	V	-
15	11	25.0	E	VFD25AMS43ANSHA	-	-
				VFD25AMS43ENSHA	-	V
				VFD25AMS43AFSHA	V	-
20	15	32.0	E	VFD32AMS43ANSHA	-	-
				VFD32AMS43ENSHA	-	V
				VFD32AMS43AFSHA	V	-
25	18.5	38.0	F	VFD38AMS43ANSHA	-	-
				VFD38AMS43ENSHA	-	V
				VFD38AMS43AFSHA	V	-
30	22	45.0	F	VFD45AMS43ANSHA	-	-
				VFD45AMS43ENSHA	-	V
				VFD45AMS43AFSHA	V	-

ASIA (Taiwan)

Taoyuan Technology Center (Green Building)

Taoyuan Plant 1

Tainan Plant (Diamond-rated Green Building)

ASIA (China)

Wujiang Plant 3

Shanghai Office

ASIA (Japan)

Tokyo Office

ASIA (India)

Rudrapur Plant
(Green Building)

EUROPE

Amsterdam, the Netherlands

AMERICA

Research Triangle Park, U.S.A.

▲ 6 Factories ■ 117 Branch Offices ⊙ 13 R&D Centers ■ 915 Distributors

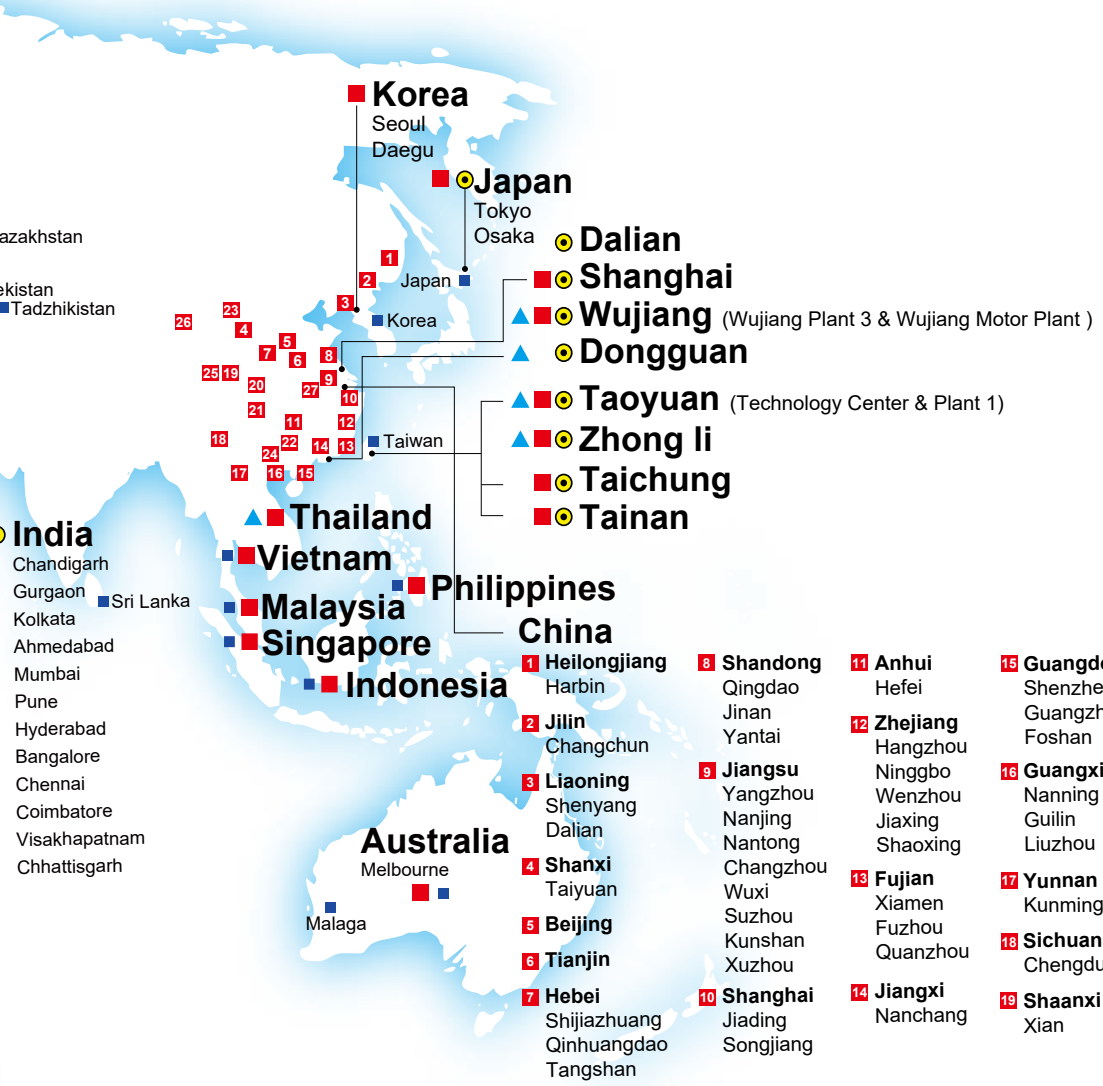

1 **Heilongjiang** Harbin
2 **Jilin** Changchun
3 **Liaoning** Shenyang Dalian
4 **Shanxi** Taiyuan
5 **Beijing**
6 **Tianjin**
7 **Hebei** Shijiazhuang Qinhuangdao Tangshan
8 **Shandong** Qingdao Jinan Yantai
9 **Jiangsu** Yangzhou Nanjing Nantong Changzhou Wuxi Suzhou Kunshan Xuzhou
10 **Shanghai** Jiading Songjiang
11 **Anhui** Hefei
12 **Zhejiang** Hangzhou Ninggbo Wenzhou Jiaxing Shaoxing
13 **Fujian** Xiamen Fuzhou Quanzhou
14 **Jiangxi** Nanchang
15 **Guangdong** Shenzhen Guangzhou Foshan
16 **Guangxi** Nanning Guilin Liuzhou
17 **Yunnan** Kunming
18 **Sichuan** Chengdu
19 **Shaanxi** Xian
20 **Henan** Zhengzhou Luoyang Changyuan
21 **Hubei** Wuhan Xiangfan
22 **Hunan** Changsha Hengyang
23 **Inner Mongolia** Baotou
24 **Guizhou** Guiyang
25 **Gansu** Lanzhou
26 **Xinjiang** Urumqi
27 **Anhui** Wuhu

Smarter. Greener. Together.

Industrial Automation Headquarters

Delta Electronics, Inc.
Taoyuan Technology Center
No.18, Xinglong Rd., Taoyuan District,
Taoyuan City 33068, Taiwan
TEL: 886-3-362-6301 / FAX: 886-3-371-6301

Asia

Delta Electronics (Shanghai) Co., Ltd.
No.182 Minyu Rd., Pudong Shanghai, P.R.C.
Post code : 201209
TEL: 86-21-6872-3988 / FAX: 86-21-6872-3996
Customer Service: 400-820-9595

Delta Electronics (Japan), Inc.
Tokyo Office
Industrial Automation Sales Department
2-1-14 Shibadaimon, Minato-ku
Tokyo, Japan 105-0012
TEL: 81-3-5733-1155 / FAX: 81-3-5733-1255

Delta Electronics (Korea), Inc.
Seoul Office
1511, 219, Gasan Digital 1-Ro., Geumcheon-gu,
Seoul, 08501 South Korea
TEL: 82-2-515-5305 / FAX: 82-2-515-5302

Delta Energy Systems (Singapore) Pte Ltd.
4 Kaki Bukit Avenue 1, #05-04, Singapore 417939
TEL: 65-6747-5155 / FAX: 65-6744-9228

Delta Electronics (India) Pvt. Ltd.
Plot No.43, Sector 35, HSIIDC Gurgaon,
PIN 122001, Haryana, India
TEL: 91-124-4874900 / FAX : 91-124-4874945

Delta Electronics (Thailand) PCL.
909 Soi 9, Moo 4, Bangpoo Industrial Estate (E.P.Z),
Pattana 1 Rd., T.Phraksa, A.Muang,
Samutprakarn 10280, Thailand
TEL: 66-2709-2800 / FAX : 662-709-2827

Delta Electronics (Australia) Pty Ltd.
Unit 20-21/45 Normanby Rd., Notting Hill Vic 3168, Australia
TEL: 61-3-9543-3720

Americas

Delta Electronics (Americas) Ltd.
Raleigh Office
P.O. Box 12173, 5101 Davis Drive,
Research Triangle Park, NC 27709, U.S.A.
TEL: 1-919-767-3813 / FAX: 1-919-767-3969

Delta Greentech (Brasil) S/A
São Paulo Office
Rua Itapeva, 26 – 3˚ Andar - Bela Vista
CEP: 01332-000 – São Paulo – SP - Brasil
TEL: 55-11-3530-8643 / 55-11-3530-8640

Delta Electronics International Mexico S.A. de C.V.
Mexico Office
Gustavo Baz No. 309 Edificio E PB 103
Colonia La Loma, CP 54060
Tlalnepantla, Estado de México
TEL: 52-55-3603-9200

EMEA

Headquarters: Delta Electronics (Netherlands) B.V.
Sales: Sales.IA.EMEA@deltaww.com
Marketing: Marketing.IA.EMEA@deltaww.com
Technical Support: iatechnicalsupport@deltaww.com
Customer Support: Customer-Support@deltaww.com
Service: Service.IA.emea@deltaww.com
TEL: +31(0)40 800 3900

BENELUX: Delta Electronics (Netherlands) B.V.
De Witbogt 20, 5652 AG Eindhoven, The Netherlands
Mail: Sales.IA.Benelux@deltaww.com
TEL: +31(0)40 800 3900

DACH: Delta Electronics (Netherlands) B.V.
Coesterweg 45, D-59494 Soest, Germany
Mail: Sales.IA.DACH@deltaww.com
TEL: +49(0)2921 987 0

France: Delta Electronics (France) S.A.
ZI du bois Challand 2, 15 rue des Pyrénées,
Lisses, 91090 Evry Cedex, France
Mail: Sales.IA.FR@deltaww.com
TEL: +33(0)1 69 77 82 60

Iberia: Delta Electronics Solutions (Spain) S.L.U
Ctra. De Villaverde a Vallecas, 265 1º Dcha Ed.
Hormigueras – P.I. de Vallecas 28031 Madrid
TEL: +34(0)91 223 74 20

Carrer Llacuna 166, 08018 Barcelona, Spain
Mail: Sales.IA.Iberia@deltaww.com

Italy: Delta Electronics (Italy) S.r.l.
Via Meda 2–22060 Novedrate(CO)
Piazza Grazioli 18 00186 Roma Italy
Mail: Sales.IA.Italy@deltaww.com
TEL: +39 039 8900365

Russia: Delta Energy System LLC
Vereyskaya Plaza II, office 112 Vereyskaya str.
17 121357 Moscow Russia
Mail: Sales.IA.RU@deltaww.com
TEL: +7 495 644 3240

Turkey: Delta Greentech Elektronik San. Ltd. Sti. (Turkey)
Şerifali Mah. Hendem Cad. Kule Sok. No:16-A
34775 Ümraniye – İstanbul
Mail: Sales.IA.Turkey@deltaww.com
TEL: + 90 216 499 9910

GCC: Delta Energy Systems AG (Dubai BR)
P.O. Box 185668, Gate 7, 3rd Floor, Hamarain Centre
Dubai, United Arab Emirates
Mail: Sales.IA.MEA@deltaww.com
TEL: +971(0)4 2690148

Egypt + North Africa: Delta Electronics
Unit 318, 3rd Floor, Trivium Business Complex, North 90 street,
New Cairo, Cairo, Egypt
Mail: Sales.IA.MEA@deltaww.com

*We reserve the right to change the information in this catalogue without prior notice.

DELTA_IA-MDS_MS300_C_EN_20210201